Request information

TITLE: PSL073-RC80A0-UHBAL0-1.0

MARK	AMEND	SIGNATURE
⚠		

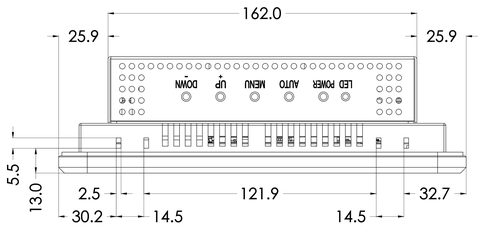

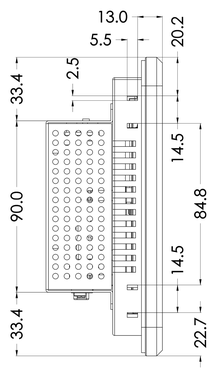

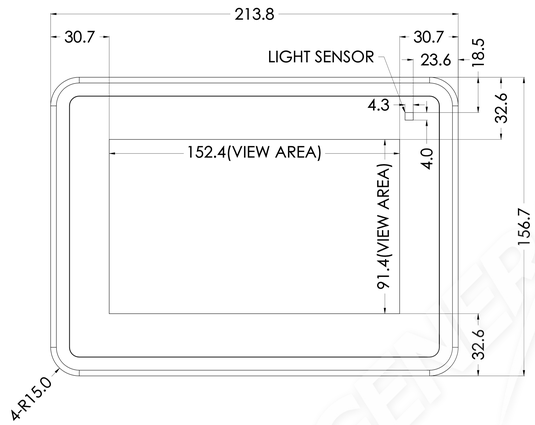

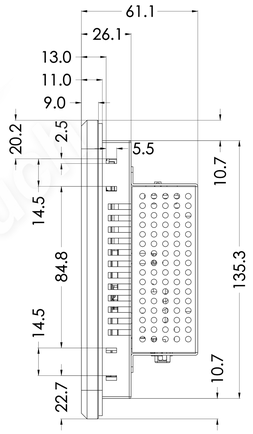

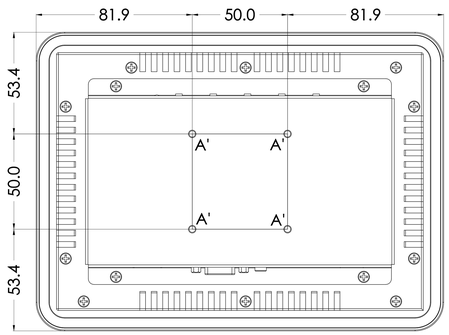

A': M4 THREADS, x4, MAX SCREW DEPTH = 6MM

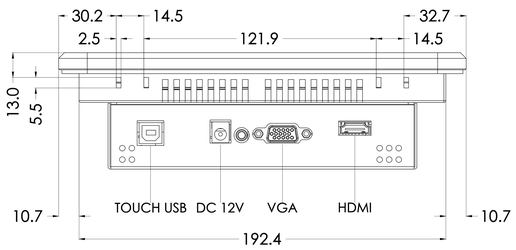

DO NOT SCALE DRAWING

GENERAL Touch		General Touch Co.,Ltd.				
SPECFICATION		OVERALL DIMENSIONS	213.8x156.7x61.1	ANTI-GLARE	Y √ N	
UNIT	DATE	VIEW AREA	152.4x91.4			DESIGNER:
MM	2025/11/11	GLASS THICKNESS	6.0 MM			Deng Chunhua
PROJECTION:		SILK SCREEN COLOR	BLACK			
		MOUNTING	VESA ☐	BRACKET	√	CHECKED BY:
SHEET 1 of 2		NOTES				Han Jin
VER: 1.0	SCALE: 1:1	TOUCH TECHNOLOGY	P-CAP	√	SAW	APPROVED BY:
TOLERANCE: ±1.0MM			NON-TOUCH		RESISTIVE	Zhou Bolin

Proudly supported by DCLTEK in the USA
WWW.DCLTEK.COM 1-800-407-8917 SALES@DCLTEK.COM

TITLE: PSL073-RC80A0-UHBAL0-1.0

MARK	AMEND	SIGNATURE
⚠		

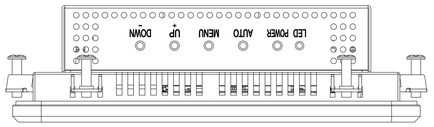

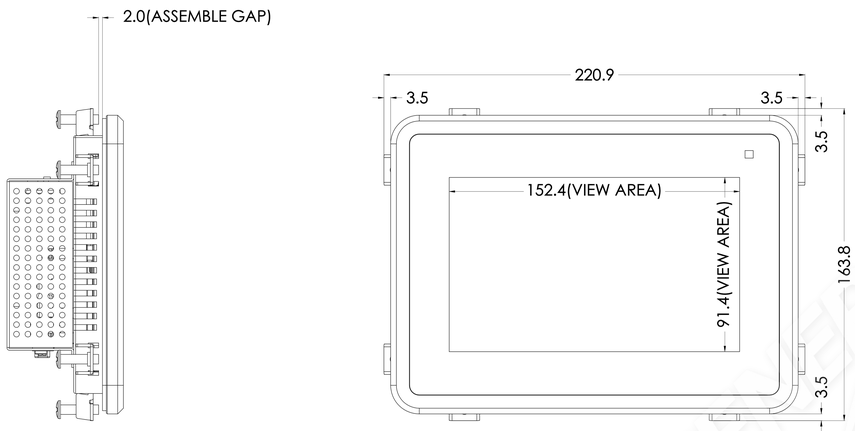

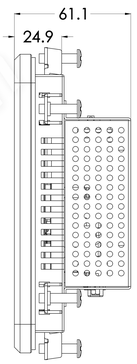

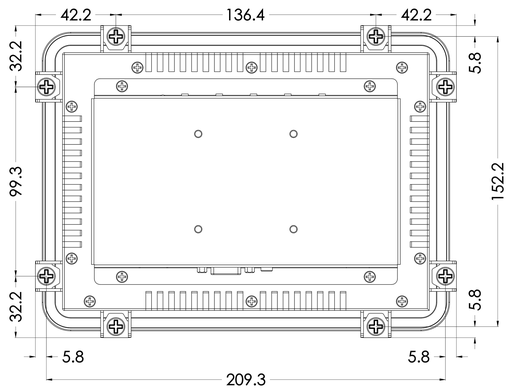

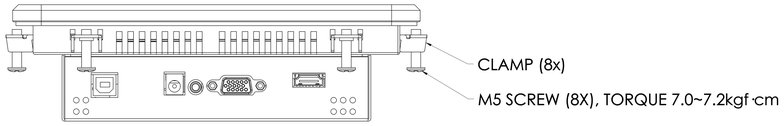

GENERAL Touch	General Touch Co.,Ltd.				
SPECFICATION	OVERALL DIMENSIONS	220.9x163.8x61.1	ANTI-GLARE	Y √ N	
UNIT / DATE	VIEW AREA	152.4x91.4			DESIGNER:
MM / 2025/11/11	GLASS THICKNESS	6.0 MM			Deng Chunhua
PROJECTION:	SILK SCREEN COLOR	BLACK			
	MOUNTING	VESA ☐	BRACKET √		CHECKED BY:
	NOTES				Han Jin
SHEET 2 of 2					
VER: 1.0 / SCALE: 1:1	TOUCH TECHNOLOGY	P-CAP	√	SAW	APPROVED BY:
		NON-TOUCH		RESISTIVE	
TOLERANCE: ±1.0MM					Zhou Bolin

DO NOT SCALE DRAWING

NOTES:
The M5 SCREWS AND CLAMPS ARE ACCESSORIES.

Proudly supported by DCLTEK in the USA
WWW.DCLTEK.COM 1-800-407-8917 SALES@DCLTEK.COM