Request information

PRODUCT SPECIFICATION

TFT-LCD MODULE

Module No: 312300-01

☑ Preliminary Specification

☐ Approval Specification

Designed by	Checked by	Approved by

Final Approval by Customer

Approved by	Comment

For more information, contact us:

WWW.DCLTEK.COM | 1-800-407-8917 | SALES@DCLTEK.COM

※The specification of “TBD” should refer to the measured value of sample . If there is difference between the design specification and measured value, we naturally shall negotiate and agree to solution with customer.

This document contains confidential and proprietary information of DCL Technologies, Inc. It is provided solely for the recipient's evaluation and may not be reproduced, disclosed, or distributed, in whole or in part, without the prior written consent of DCL Technologies, Inc.

1.Document Revision History

Version	Contents	Date	Note
V0	Initial version	2024.07.01	

2. General Description

N0	Item	Specification	Unit	Remark
1	LCD Size	TFT" 15.0	inch	-
2	Panel Type	IPS	-	-
3	Display Resolution	1024(H)× 768(V)	pixel	-
4	Display mode	Normally Black	-	-
5	Display colors	16.7M	-	-
6	CTP+LCM Module Size	348.00(H)x275.50(V)x12.3(T)	mm	Note
7	Active Area	304. 13(H) × 228.10(V)	mm	Note
8	Pixel Pitch	0.297(H) × 0.297(V)	mm	-
9	Weight	TBD	g	-
10	Driver IC	-	bit	-
11	Interface	LVDS	-	-

2.1.GENERAL DESCRIPTION

2.1.1 General Description

The specification is applied to 15.0 inch model Liquid Crystal Display.

The matrix uses a-Si Thin Film Transistor as a switching device. This TFT LCD has a 15.0 inch diagonally measured active display area with HD resolution (1024 horizontal by 768 vertical pixels array). This product is with data driver ICs and 20-pins connectors with LVDS interface.

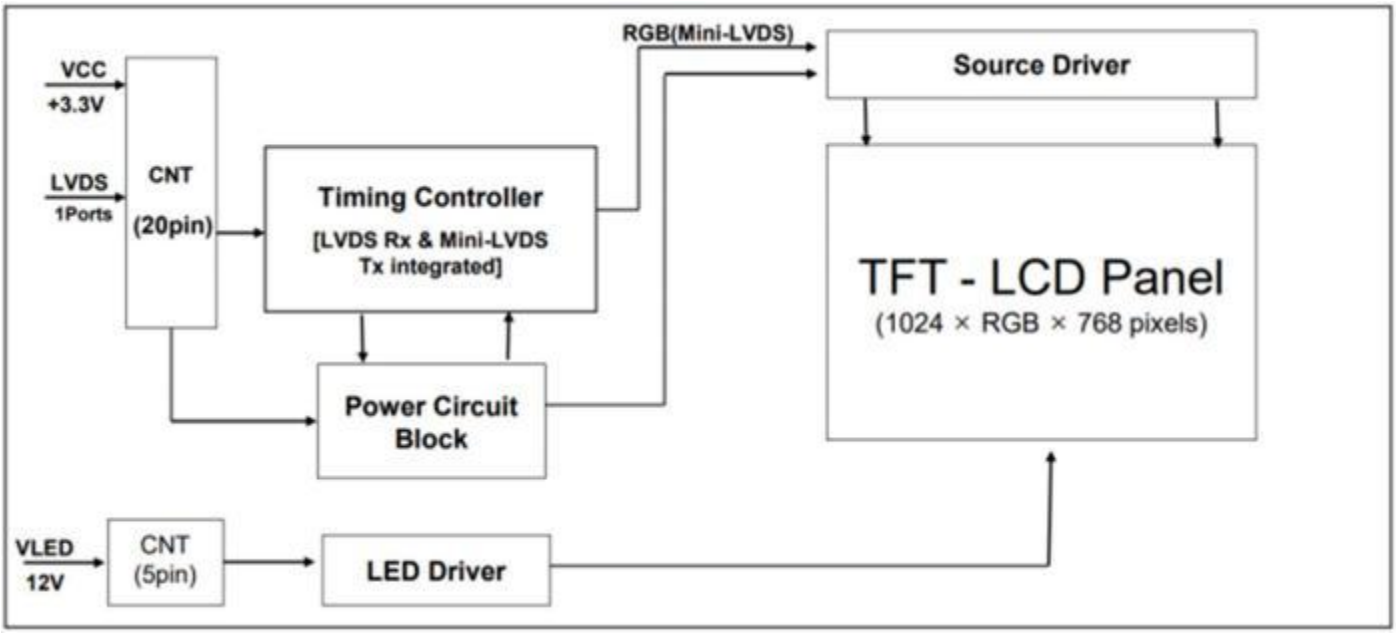

Figure 1. Drive Architecture

2.1.2 Features

(1) 1 Port LVDS interface

(2) 16.7M (6bit+FRC) color depth, color gamut

72%(3) Green product (RoHS & Halogen free

product)(4) DE (Data Enable) only mode

3.Mechanical Drawing

This document contains confidential and proprietary information of DCL Technologies, Inc. It is provided solely for the recipient's evaluation and may not be reproduced, disclosed, or distributed, in whole or in part, without the prior written consent of DCL Technologies, Inc.

Front View

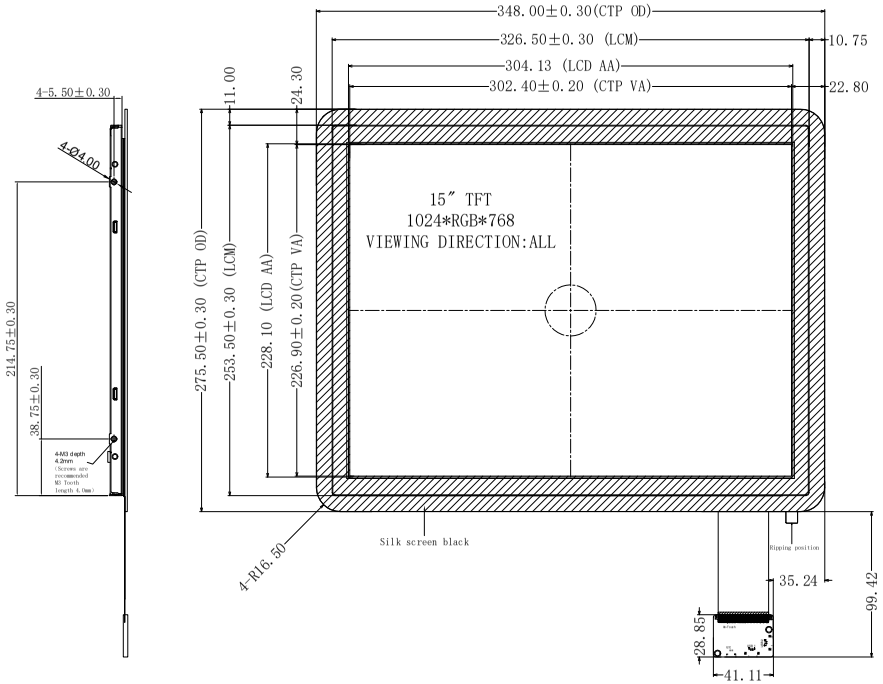

Side View

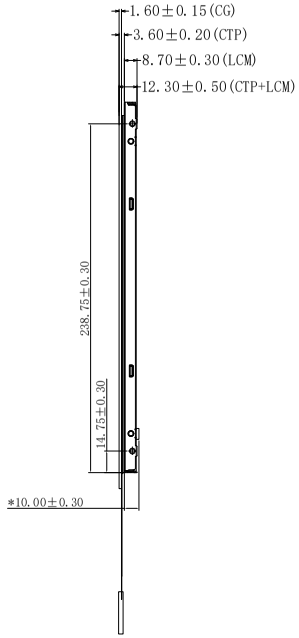

Back View

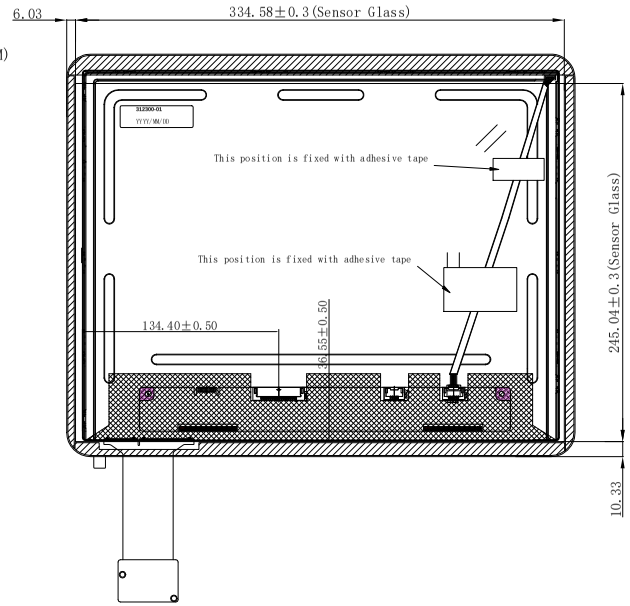

CN1 PIN DESCRIPTION

1	VCC
2	VCC
3	GND
4	NC
5	RIN0-
6	RIN0+
7	GND
8	RIN1-
9	RIN1+
10	GND
11	RIN2-
12	RIN2+
13	GND
14	CLKIN-
15	CLKIN+
16	GND
17	RIN3-
18	RIN3+
19	GND
20	NC

CN2 PIN DESCRIPTION

1	NC
2	BL_PWM
3	BL-EN
4	GND
5	VLED

J1(USB communication)

PIN	definition
1	VDD/5V
2	D-
3	D+
4	GND

Technical parameters:
1. TP structure: G+G;
2. TP type: COB; IC selection: ILITEK2511
Working voltage: 3.3V-5V
3. Transmittance: ≥ 85%
4. Surface hardness: more than 6H
5. No dimensional tolerance should be ±0.2mm
6. Products comply with RoHS standards.

Notes:
1. Display : 15″, TFT
2. Resolution: 1024xRGBx768
3. LCD Viewing Direction: all
4. Display Mode: Normally Black
5. LCM+CTP Brightness: 750cd/m²(TYP)
6. Unmarked tolerance:±0.2
7. Operating temperature: -20° C~+70° C
8. Storage temperature: -30° C~+80° C
9. Requirements on Environmental Protection: ROHS

BLU If=260mA (TYP) VF=39V(TYP)

REV	DESCRIPTION	DATE	NAME
3			
2			
1			
0	NEW	2024.04.24	

SCALE:1/1	UNIT:mm	PAGE:1/1		Approve	Check	Drawn
Part No:	312300-01		VER:V0			
Customer No:						

4. INTERFACE CONNECTION

4.1 Electrical Interface Connection

The electronics interface connector is STM MSB240420_HE;The BL connector is Jonhon 88-207-025

The connector interface pin assignments are listed in Table 8; The connector BL interface pin assignments are listed in Table 9.

<Table 8. Pin Assignments for the Interface Connector>

Terminal	Symbol	Functions
Pin No.	Symbol	Description
1	VCC	Power supply 3.3V(typ)
2	VCC	Power supply 3.3V(typ)
3	GND	Ground
4	NC	No connection
5	RIN0-	Negative LVDS differential data input
6	RIN0+	Positive LVDS differential data input
7	GND	Ground
8	RIN1-	Negative LVDS differential data input
9	RIN1+	Positive LVDS differential data input
10	GND	Ground
11	RIN2-	Negative LVDS differential data input
12	RIN2+	Positive LVDS differential data input
13	GND	Ground
14	CLKIN-	Negative LVDS differential data input
15	CLKIN+	Positive LVDS differential data input
16	GND	Ground
17	RIN3-	Negative LVDS differential data input
18	RIN3+	Positive LVDS differential data input
19	GND	Ground
20	NC	No connection

<Table 9. Pin Assignments for BL Connector>

Terminal	Symbol	Functions
Pin No.	Symbol	Description
1	NC	No connection
2	BL_PWM	System PWM Signal Input

3	BL_EN	LED Enable Pin
4	GND	Ground
5	VLED	LED Power Supply 12V(typ)

.2 Interface Connector Drawing

The connector interface drawing is shown in Figure 8; The connector BL interface drawing is shown in Figure 9.

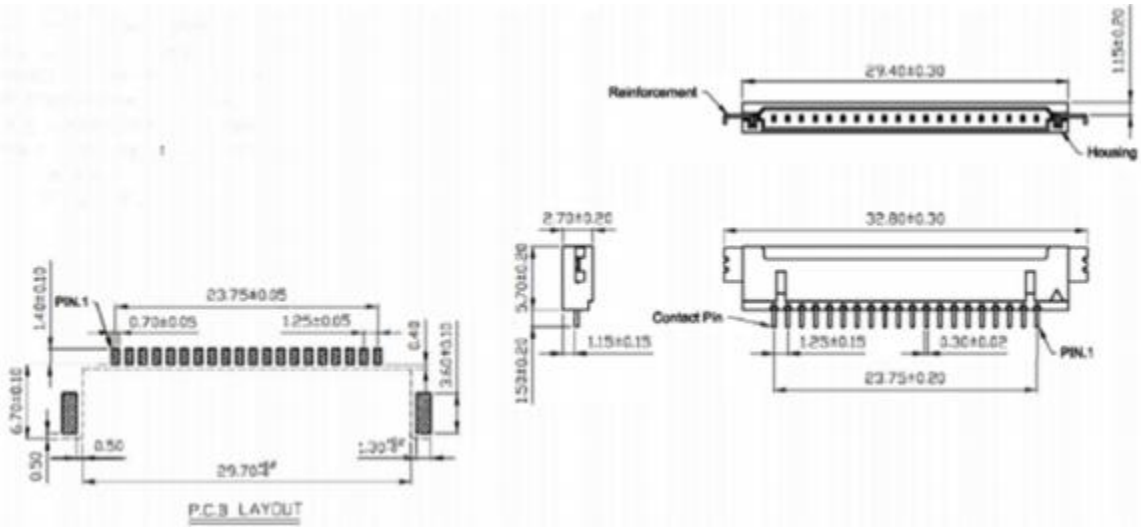

Figure 8. Drawing for the Interface Connector

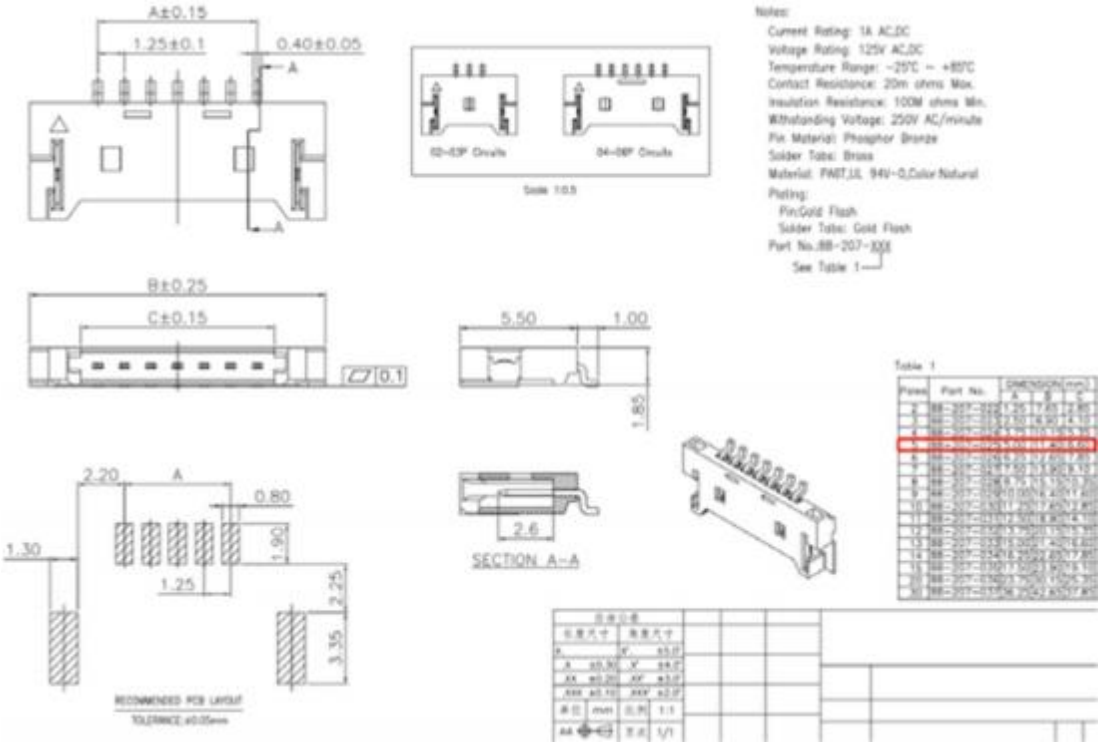

Figure 9. Drawing for BL Connector

5. ABSOLUTE MAXIMUM RATINGS

The followings are maximum values which, if exceed, may cause faulty operation or damage to the unit.

The operational and non-operational maximum voltage and current values are listed in Table 2.

<Table 2. Absolute Maximum Ratings>

Ta=25+/-2°C

Parameter	Symbol	Min.	Max.	Unit	Remarks
Power Supply Voltage	VCC	-0.3	3.3	V	(1),(2) (3),(4)
Logic Supply Voltage	VDD	- 0.3	VCC	V	
Operating Temperature	TOP	-20	70	°C	
Storage Temperature	TST	-30	80	°C	

Note (1) All the parameters specified in the table are absolute maximum rating values that may cause faulty operation or unrecoverable damage, if exceeded. It is recommended to follow the typical value.

Note (2) All the contents of electro-optical specifications and display fineness are guaranteed under Normal Conditions. All the display fineness should be inspected under normal conditions. Normal conditions are defined as follow: Temperature: 25℃, Humidity: 50 ± 10%RH.

Note (3) Unpredictable results may occur when it was used in extreme conditions. Ta= Ambient Temperature, Tgs= Glass Surface Temperature. All the display fineness should be inspected under normal conditions.

Note (4) Temperature and relative humidity range are shown in the figure below.

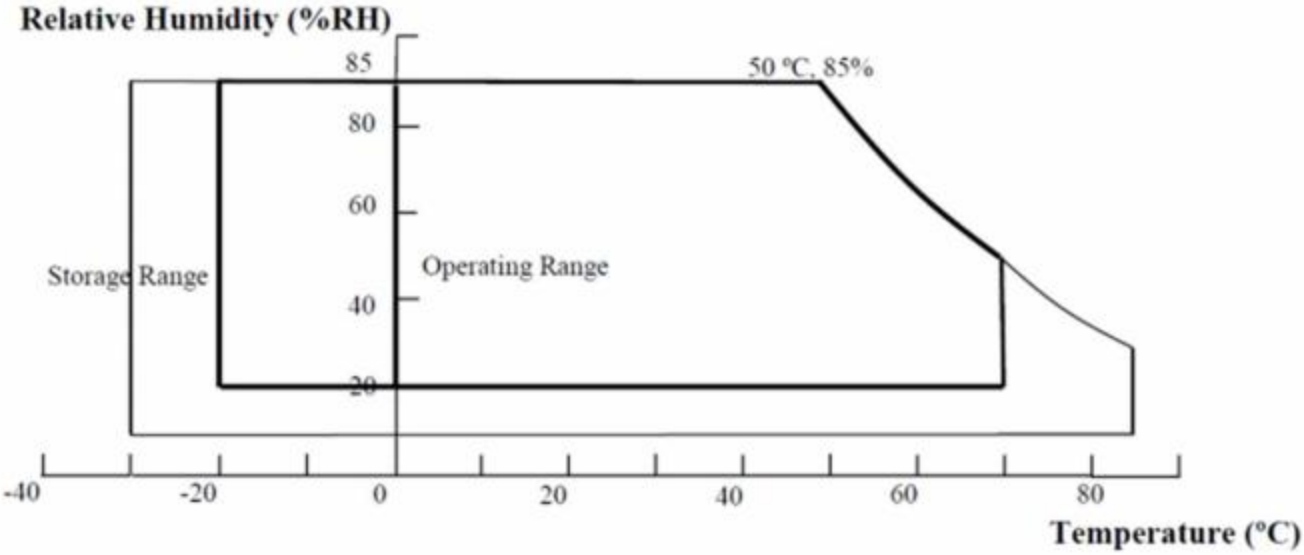

Figure 2. Absolute Ratings of Environmentof the LCD Module

6. ELECTRICAL SPECIFICATIONS

6.1 Electrical Specifications

<Table . Electrical Specifications>

Ta=25+/-2°C

Parameter	Symbol	Min.	Typ.	Max.	Unit	Remarks
Power Supply Voltage	VCC	3.0	3.3	3.6	V	Note(3)
Permissible Input Ripple Voltage	VRF	-	-	350	mV	Note(3)
Power Supply Current	ICC	-	-	TBD	mA	Note(1)
Power Supply Inrush Current	Inrush	-		2	A	Note(2)
Power Consumption	mosaic	-	-	TBD	W	Note(1)
Power Consumption	RGB			TBD	W	Note(1)

Notes :

(1)The supply voltage is measured and specified at the interface connector of OC. The current draw and power consumption specified is for 3.3V at 25 °C @ Frame rate 60Hz.

a) Typ: Mosaic7 x5 pattern

b)Max: R255 pattern

(a) (b)

Figure 3. Power Measure Patterns

(2)Measure condition (Figure 4)

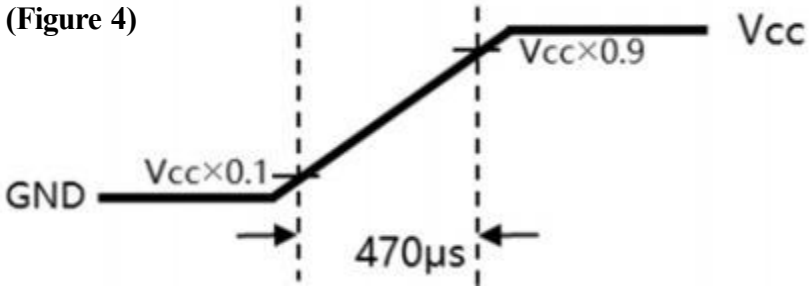

Figure 4. Inrush Measure Condition

(3)Input voltage range:3.0~3.6V,Test condition: Oscilloscope bandwidth 20MHz, AC coupling.

6.2 Backlight Unit

<Table 4. Backlight Unit Electrical Specifications>

Ta=25+/-2°C

Parameter	Symbol	Min.	Typ.	Max.	Unit	Remarks
LED Light Bar Input Current Per Input Pin	IF	TBD	55	TBD	mA	Note(4)
LED Driver Power Input Voltage	VLED	-	-	39	V	
LED Driver Power Input Current	ILED	-	-	260	mA	
LED Light Bar Input Voltage Per Input Pin	Vout	TBD	TBD	TBD	V	Note(3)
Power Supply Voltage for LED Driver Inrush	Iled inrush			TBD	A	
EN Control Level(B/L On)	BL_EN	3	3.3	3.6	V	
EN Control Level(B/L Off)	BL_EN	0	0	0.6	V	
PWM Control Level(High Level)	BL_PWM	3	3.3	3.6	V	
PWM Control Level(Low Level)	BL_PWM	0	0	0.6	V	
PWM Control Frequency	FPWM	0.12	-	1	KHz	
Duty Ratio	-	5	-	100	%	
CTP_LCM Brightness	-	-	-	750	nits	
LED Life-Time	-	-	-	50000	hour	
Power consumption	-	B/L	-	9.2	W	

Notes :

(1)LED strips only support 4 strings(parallel) of design

(2)There are one light bar ,and the specified current is input LED chip 100% duty current (3)LED Light Bar Input Voltage Per Input Pin to 39V.

(4)The sense current of each input pin is 55mA

7. OPTICAL SPECIFICATION

7.1 Measurement Conditions

The table below is the test condition of optical measurement.

<Table 5. the test condition of optical measurement >

Item	Symbol	Value	Unit
Ambient Temperature	TA	25±5	ºC
Ambient Humidity	HA	50± 10	% RH
Supply Voltage	VCC	3.3±0.3	V
Driving Signal	Refer to the typical value in Chapter 3: ELECTRICAL SPECIFICATIONS		
Vertical Refresh Rate	Fv	60	Hz
Warm up time	Twarm	>15 min	min
Darkroom	ED	<1 lux	lux

7.2 Optical Specifications

<Table 6. Optical Specifications>

Item		Symbol	Condition	Min.	Typ.	Max.	Unit	Note
Color Chromaticity (CIE1931)	Red	Rx	θx=0° ,θy=0° Viewing Angle at Direction Normal at centerpoint ofpanel, Light source is	Typ - 0.03	0.6501	Typ +0.03		
		Ry			0.344			
	Green	Gx			0.3452			
		Gy			0.6106			
	Blue	Bx			0.1348			
		By			0.045			
	White	Wx			0.3186			
		Wy			0.333			
Uniformity		%		75%	80%	-	%	
CTP+LCM Brightness		Nits		-	750		nits	
Contrast Ratio		CR	θx=0° ,θy=0°		1000:1	-	-	(1)
Response Time		Tg		-	-	30	ms	(2)
Viewing Angle	Horizontal	θx+	CR>10 θx=0° ,θy=0°	80	85	89	Deg.	(3)
		θx-		80	85	89		
	Vertical	θy+		80	85	89		
		θy-		80	85	89		

Notes:

(1) Definition of Contrast Ratio (CR):

The contrast ratio can be calculated by the following expression,

Contrast Ratio (CR): $CR = \frac{CR_W}{CR_D}$

CR_W : Luminance of LCD module with full screen White pattern (255,255,255) at center point. CR_D : Luminance of LCD module with full screen Dark pattern (0,0,0) at center point.

Where the measure point of to the Contrast Ratio is the center of the panel.

(2) Definition of Response time (Tg):

Average switching time of luminance ratios among 10% and 90% to each other and is optimized on frame Rate = 60Hz.

<Table 7. Switching time of luminance ratios matrix>

Measured Response time		To	
		10%	90%
From	10%		$T_{10\% \text{ to } 90\%}$
	90%	$T_{90\% \text{ to } 10\%}$	

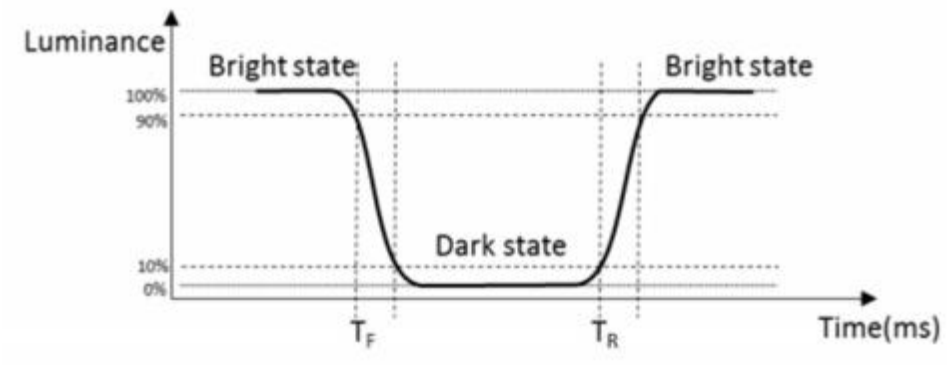

Figure 5. The definition of T_R and T_F

Measured response time is determined by rise time (T_R) and fall time (T_F) , and shown in Figure 5.

(3) Definition of Viewing angle:

As Note (1) the static contrast ratio definition, the viewing angles are defined at the angle that the contrast ratio is larger than 10 at four directions relative to the perpendicular direction of the pospur's module (two vertical angles: up θy+ and down θy-; and two horizontal angles: right θx+ and left θx-). The standard setup of measurement is shown in Figure 6

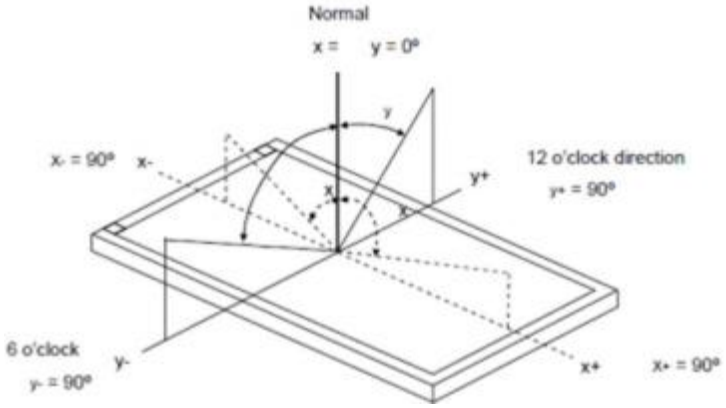

Figure 6. Definition of Viewing angle

7.3 Optical Measurements

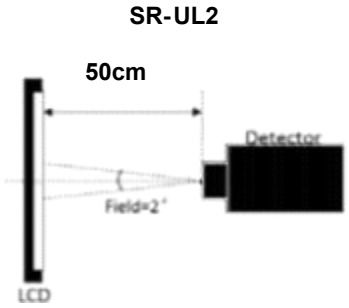

Figure 7. Measurement equipment

Center Luminance of white is defined as luminance value at the center of the display. This optical measurement is shown in Figure 7.

7.4 Pixel Structure

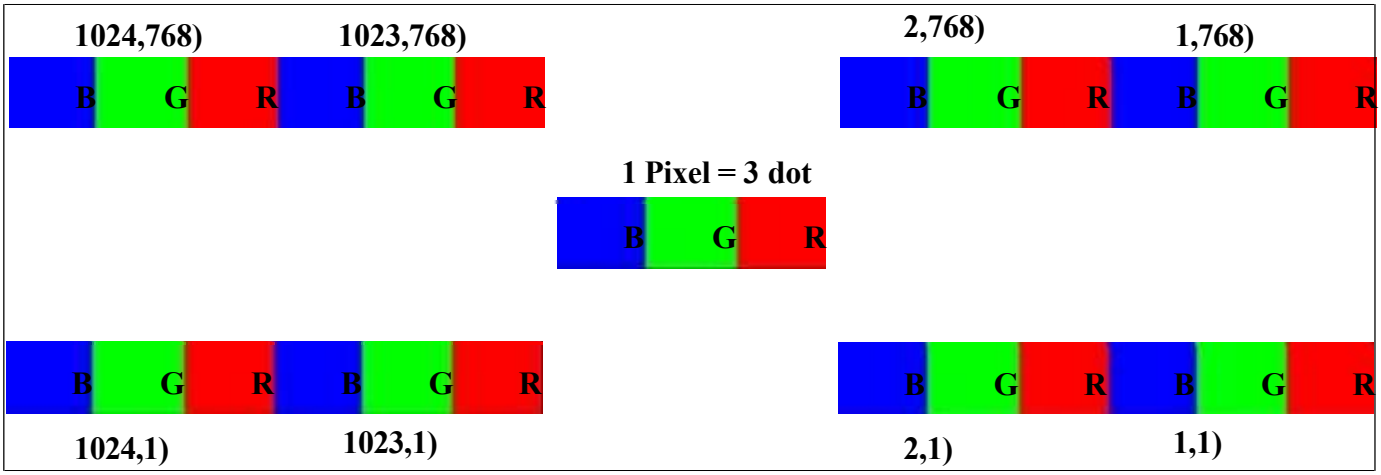

Block Diagram of Interface

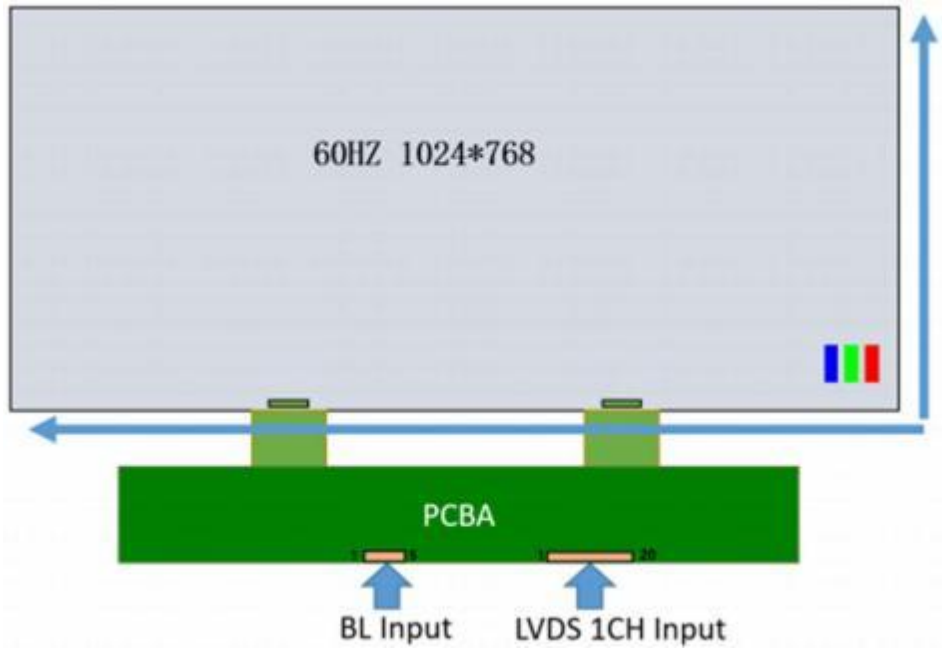

Figure 10. Block Diagram of Interface

8. SIGNAL TIMING SPECIFICATION

8.1 Signal Timing Specification

<Table 10. Signal Timing Specification>

Parameter	Symbols	Panel Resoiution			Unit
		1024RGB*768 (1 port)			
		Min	Typ.	Max	
LVDS Clock frequency	Fclk	TBD	64.35	TBD	MHz
Horizontal Active Display	T_{HD}	TBD	1024	TBD	T_{CLK}
Horiaontal Total	T_H	TBD	1344	TBD	T_{CLK}
Vertical Active Display	T_{VD}	TBD	768	TBD	T_H
Vertical Total	T_V	TBD	798	TBD	T_H
Frame rate	F	TBD	60	TBD	Hz
system	VESA				
mode	DE				

Attention:The module is operated in DE only mode ,H sync and V syDncEinput signal have no effect on normal operation.

Note:

(1)Please make sure the range of pixel clock follows the following equations:

$$FCLK\ (max) \geqslant Fmax \times T_V \times T_H \times (1+Fclkin_mod\ (max))$$

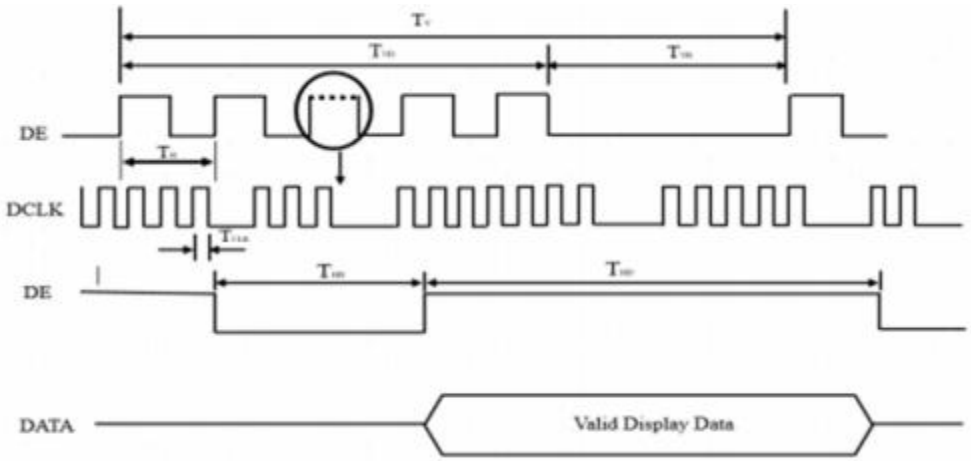

Figure 11. Signal timing diagram

8.2 Signal Electrical Characteristics for LVDS Receiver

The built-in LVDS receiver is compatible with (ANSI/TIA/TIA-644) standard.

<Table 11. LVDS mode DC electrical characteristics >

Parameter	Symbol	spec			Unit	Not
		Min	Typ	Max		
Differential Input Voltage	V_{ID}	100	-	600	mV	
Common Input Voltage	V_{CM}	1.0	1.2	1.4	V	
Differential Input High Threshold Voltage	V_{TH}	0.1	-	-	V	
Differential Input Low Threshold Voltage	V_{TL}	-	-	- 0.1	V	
Spread spectrum modulation range	Fclkin_mod	Fclkin-3%		Fclkin+3%	MHz	
Spread spectrum modulation frequency	F_{SSM}	30	-	200	KHz	
Receiver Skew Margin	T_{RMS}	-400		400	ps	
Terminating Resistor	RT	90	100	110	ohm	
Input cycle to cycle jitter	Trcl	-	-	200	ps	

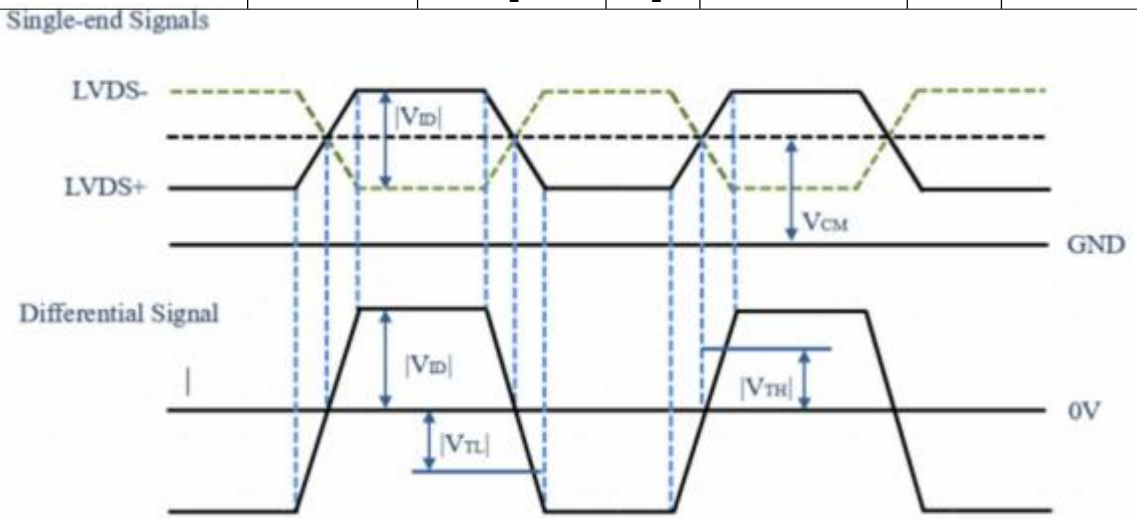

Figure 12. LVDS mode DC electrical characteristics

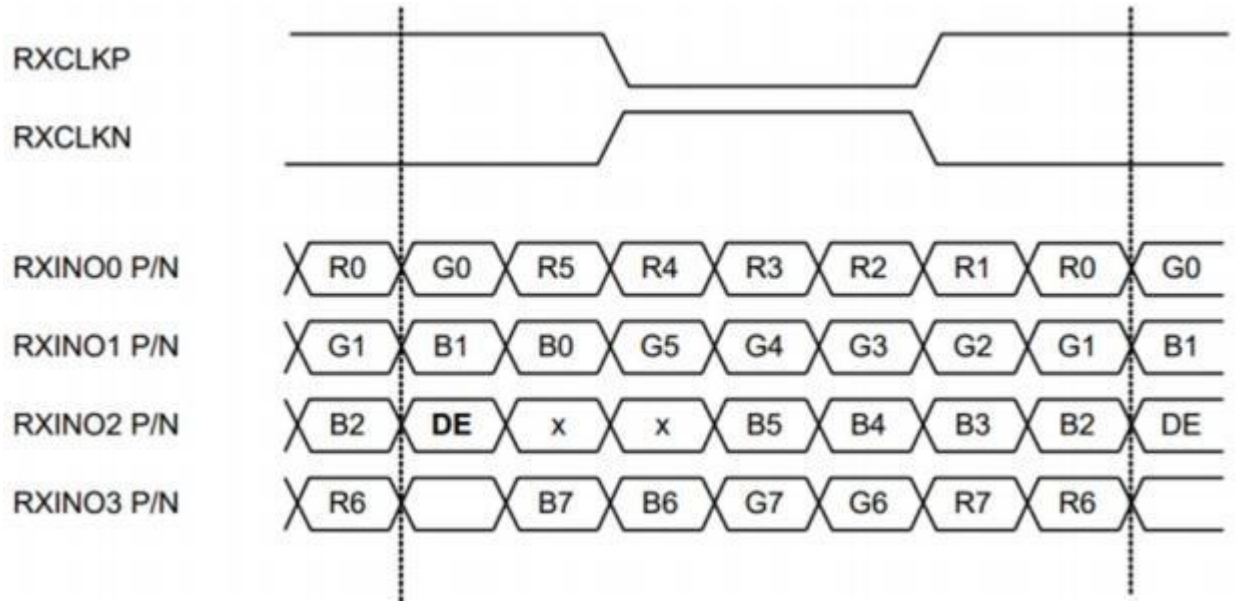

Figure 13. 1-port LVDS signals, VESA format (8-bit)

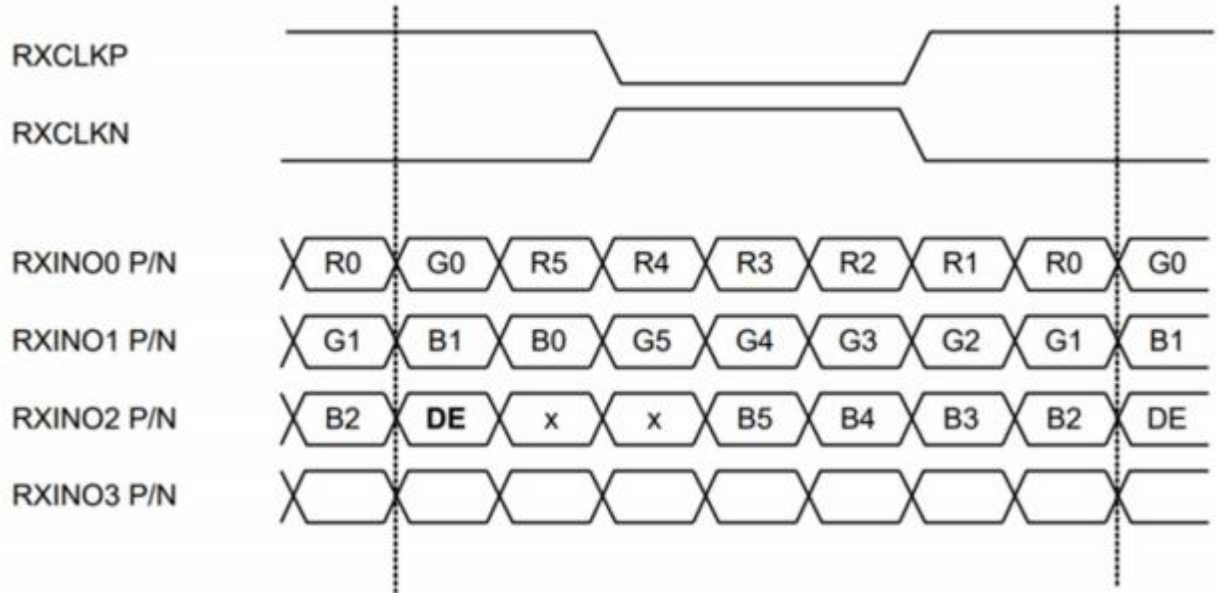

Figure 14. 1-port LVDS signals, VESA format (6-bit)

9. Power On/Off Sequence

The power sequence specification are shown as the following table and diagram.

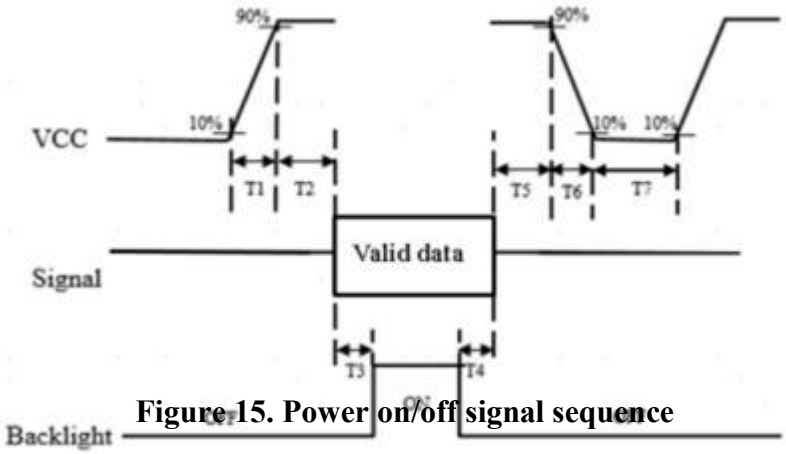

Figure 15. Power on/off signal sequence

Parameter	Values			Unit
	Min.	Typ.	Max.	
T1	0.5	-	10	ms
T2	0	30	50	ms
T3	450	-	-	ms
T4	100	250	-	ms
T5	0	20	50	ms
T6	0.1	-	100	ms
T7	1000			ms

Note:

(1)The supply voltage of the external system for the module input should be the same as the definition .

(2)To avoid some abnormal display noise, we suggest "VCC falling time" to follow "T6" definition.

(3)In case of VCC is off level, please keep the level of input signals on the low or keep high impedance.

10. Fliker Adjustment

10.1 Flicker must be optimized after module assembly and aging.

Its patterns are as follow:

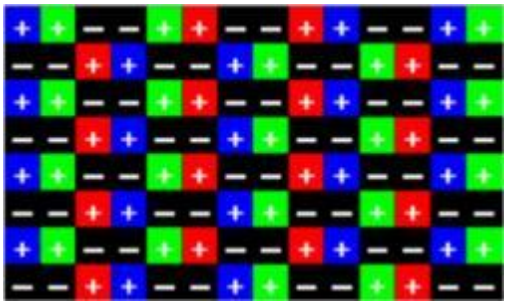

Frame N

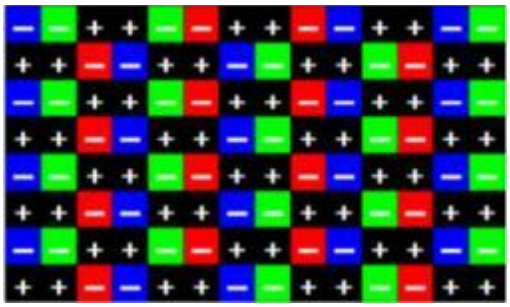

Frame N+1

Figure 16. Bright sub-pixel=G127(50% grayscale); Dark sub-pixel=G0 (0% grayscale)

10.2 Digital VCOM Modify Flow.

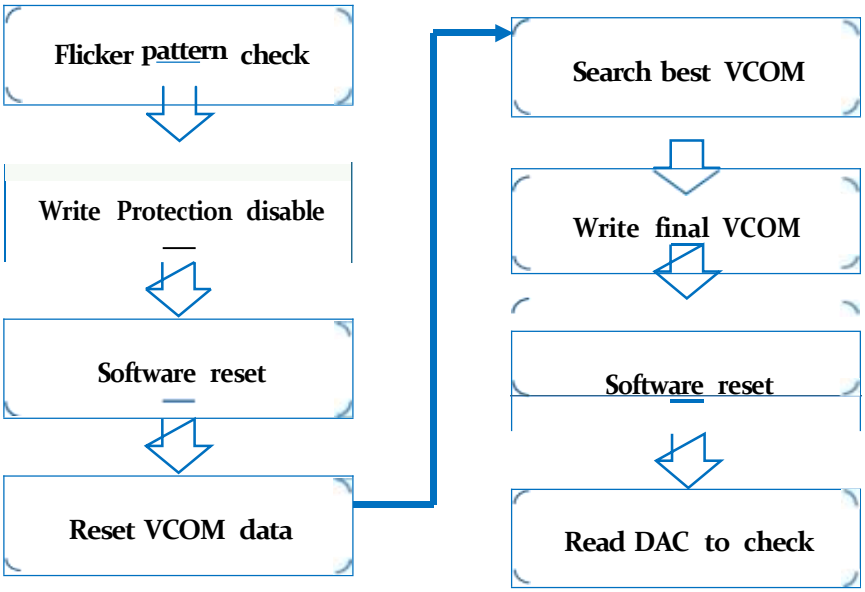

Note:

(1)DAC data to EEPROM automatically after write protect function enabled, then IC will auto reload.

(2)During Digital VCOM Modification, please keep the WP of the input signal "No Connection" or " High ".

10.3 About VCOM Adjustment(I2C Bus Format)

S indicates START

P indicates STOP

A indicates ACKNOWLEDGEMENT

NA indicates NO ACKNOWLEDGEMENT

SR indicates REPEAT START

R indicates READ

W indicates WRITE

Description	Index address	D7	D6	D5	D4	D3	D2	D1	D0	Default
VIO buck configuration	14h	VIO_DISCH	-	VGL_DISCH	-	-	VCOM_OFF_SEL	LDO_DLY[1:0]		02h
Version code	15h	-	-	-	-	Version Code[3:0]				00h
LDO delay	16h	VCORE_DISCH	LDO_DISCH	VCOM_DISCH	VCOM_DLY[4:0]					-
VCOM configuration	17h	PVCOM[7:1]							-	-

※Step1 -> Load VCOM EEPROM data to DAC register(以下 address 改 17h)

E. Read data from EEPROM

Example: Read data from EEPROM address 06h

Step1: Command for reading EEPROM

Start	0	1	0	0	0	1	1	0	Slave ACK	1	1	1	1	1	1	1	1	Slave ACK	0	X	X	X	X	X	X	1	Slave ACK	Stop

Step2: Read command

Start	0	1	0	0	0	1	1	0	Slave ACK	0	0	0	0	0	1	1	0	Slave ACK

Start	0	1	0	0	0	1	1	1	Slave ACK	D	D	D	D	D	D	D	D	Master ACK	D	D	D	D	D	D	D	D	Master ACK	Stop

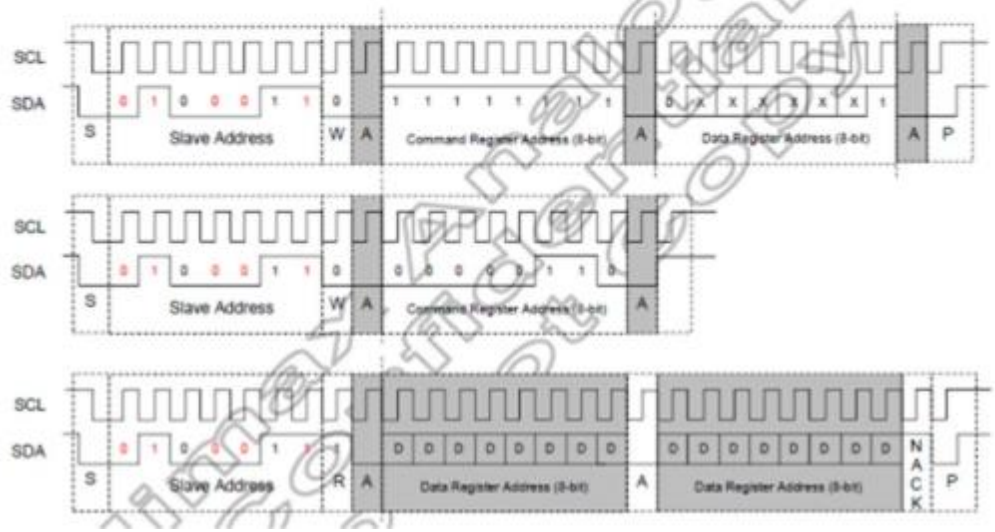

※Step2 -> Search Best VCOM Setting

Description	Index address	D7	D6	D5	D4	D3	D2	D1	D0	Default
VIO buck configuration	14h	VIO_DISCH	-	VGL_DISCH	-	-	VCOM_OFF_SEL	LDO_DLY[1:0]		02h
Version code	15h	-	-	-	-	Version Code[3:0]				00h
LDO delay	16h	VCORE_DISCH	LDO_DISCH	VCOM_DISCH	VCOM_DLY[4:0]					-
VCOM configuration	17h	PVCOM[7:1]							-	-

I²C protocol for PMIC

Description	D7	D6	D5	D4	D3	D2	D1	D0	Default
Slave address (23h, 7-bit) Read=1/Write=0	0	1	0	0	0	1	1	R/W	46h (8-bit)

A. Write single byte to DAC

Example: Write data 0Fh into DAC address 01h

Start	0	1	0	0	0	1	1	0	Slave ACK	0	0	0	0	0	0	0	1	Slave ACK	0	0	0	0	1	1	1	1	Slave ACK	Stop

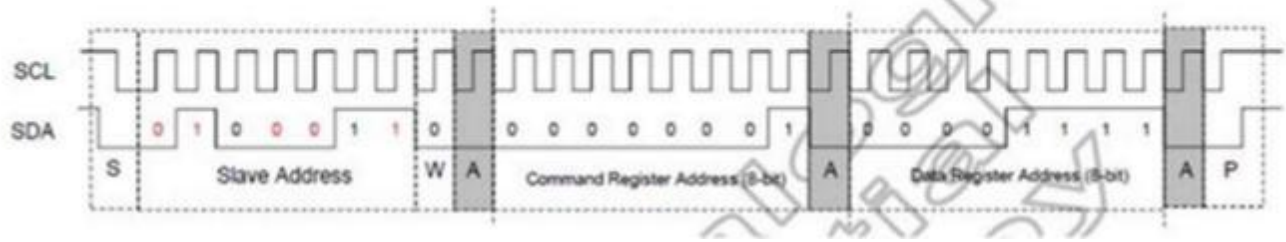

※Step3 ->Write VCOM DAC register into EEPROM

C. Write all DAC registers to EEPROM

Example: Write data 80h into DAC address FFh

Start	0	1	0	0	0	1	1	0	Slave ACK	1	1	1	1	1	1	1	1	Slave ACK	1	X	X	X	X	X	X	0	Slave ACK	Stop

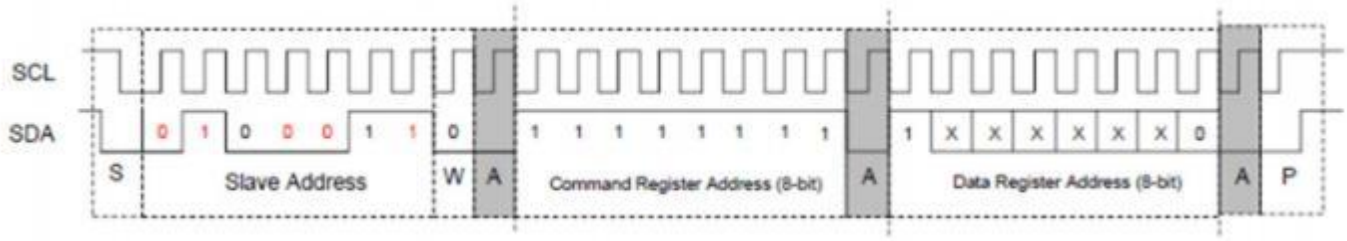

※Step4 -> Read single control byte of VCOM data from DAC register, Read DAC VCOM must equal to Final VCOM(以下 address 改 17h)

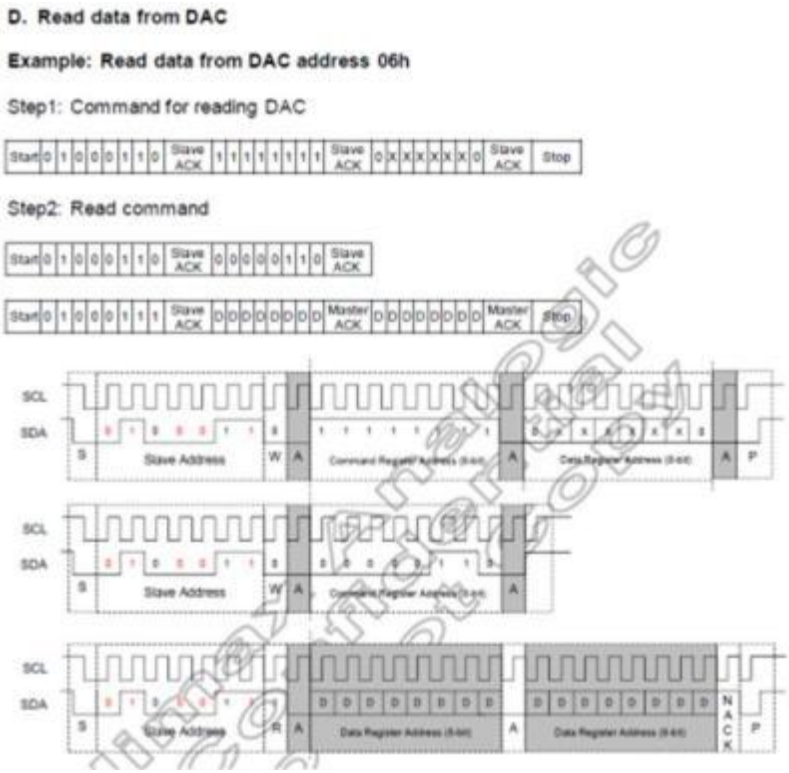

10.4 Interval of Step to Step

The interval times must follow below figure.

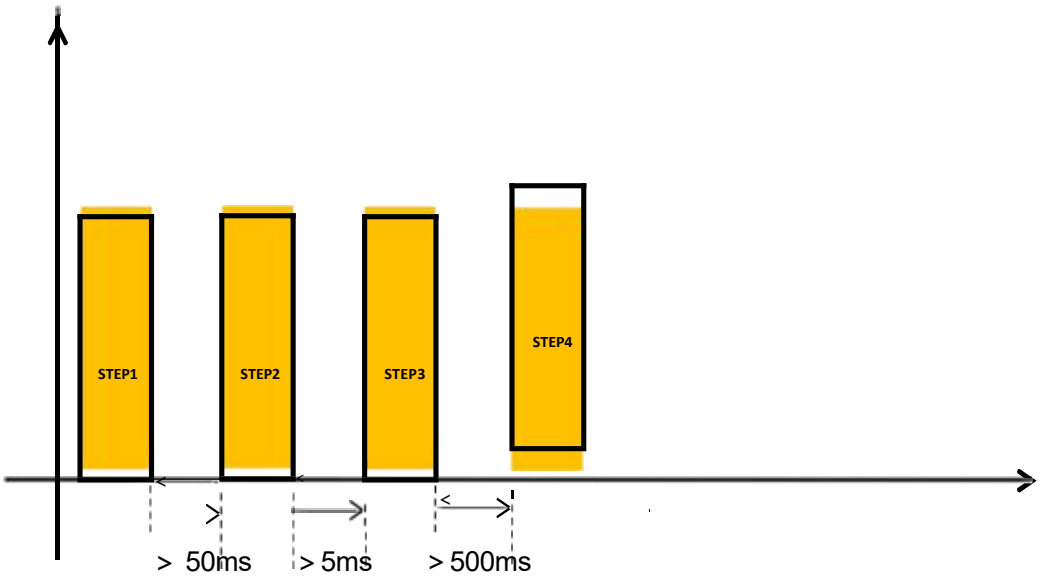

11. Reliability test items

No.	Test Item	Test Condition	Notes
1	High Temp. Storage	+80°C / 48H	1. Functional test isOK. Missing Segment,short, unclear segment non-display,display abnormally and liquid crystal leakare un-allowed. 2. No low temperature bubbles,end seal loose andfall, frame rainbow.
2	Low Temp. Storage	-30°C / 48H	
3	High Tempe. Operating	+70°C / 48H	
4	Low Tempe. Operating	-20°C / 48H	
5	High Temperature /Humidity storage	50°C x 90%RH /48H	
6	Thermal and cold shock	Static state， -20℃（30min） ~60℃（30min），50 cycles	
7	ESD test	± 2KV,Human Body Mode, 150pF/330Ω; ±4KV, Air Mode, 150pF/330Ω;	

Note: All tests above are practiced at module type.

There is no display function NG issue occurred, All the cosmetic specification is judged before the reliability stress.

12.0 General Precaution

12.1 Use Restriction

This product is not authorized for use in life supporting systems, aircraft navigation control systems, military systems and any other application where performance failure could be life-threatening or otherwise catastrophic.

12.2 Asembly Precaytton

1、Please use the mounting hole on the module side in installing and do not bending or wrenching LCD in assembling. And please do not drop, bend or twist LCD module in handling.

2、Please design display housing in accordance with the following guide lines.

3、Housing case must be destined carefully so as not to put stresses on LCD all sides and not to wrench module. The stresses may cause non-uniformity even if there is no non-uniformity statically.

4、Keep sufficient clearance between LCD module back surface and housing when the LCD module is mounted. The clearance in the design is recommended taking into account the tolerance of LCD module thickness and mounting structure height on the housing.

5、 Please do not push or scratch LCD panel surface with any-thing hard. And do not soil LCD panel surface by touching with bare hands. (Polarizer film, surface of LCD panel is easy to be flawed.)

6、Please do not press any parts on the rear side such as source IC, gate IC, and FPC during handling LCD module. If pressing rear part is unavoidable, handle the LCD module with care not to damage them.

7、Please wipe out LCD panel surface with absorbent cotton or soft cloth in case of it being soiled.

8、 Please wipe out drops of adhesives like saliva and water on LCD panel surface immediately. They might damage to cause panel surface variation and color change. 11.2.7 Please do not take a LCD module to pieces and reconstruct it. Resolving and reconstructing modules may cause them not to work well.

12.3 Disassembling or Modification

Do not disassemble or modify the module. It may damage sensitive parts inside LCD module, and may cause scratches or dust on the display. does not warrant the module, if customers disassemble or modify the module.

12.4 Breakage of LCD Panel

1 、If LCD panel is broken and liquid crystal spills out, do not ingest or inhale liquid crystal, and do not contact liquid crystal with skin.

2、 If liquid crystal contacts mouth or eyes, rinse out with water immediately.

3、 If liquid crystal contacts skin or cloths, wash it off immediately with alcohol and rinse thoroughly with water.

4、 Handle carefully with chips of glass that may cause injury, when the glass is broken.

12.5 Absolute Maximum Ratings and Power Protection Circuit

1、Do not exceed the absolute maximum rating values, such as the supply voltage variation, input voltage variation, variation in parts' parameters, environmental temperature, etc., otherwise LCD module may be damaged.

2、 Please do not leave LCD module in the environment of high humidity and high temperature for a long time.

3、 It's recommended employing protection circuit for power supply.

11.6 Operation

1 、Do not touch, push or rub the polarizer with anything harder than HB pencil lead.Use fingerstalls of soft gloves in order to keep clean display quality, when persons handle the LCD module for incoming inspection or assembly.

2、 When the surface is dusty, please wipe gently with absorbent cotton or other soft material.

3 、Wipe off saliva or water drops as soon as possible. If saliva or water drops contact with polarizer for a long time, they may causes deformation or color fading.

4 、When cleaning the adhesives, please use absorbent cotton wetted with a little petroleum benzine or other adequate solvent.

12.6 Static Electricity

1 、Protection film must remove very slowly from the surface of LCD module to prevent from electrostatic occurrence.

2、 Because LCD module uses CMOS-IC on TFT-LCD panel, it is very weak to electrostatic discharge. Please be careful with electrostatic discharge.

3 、Persons who handle the module should be grounded through adequate methods.

12.7 Disposal

When disposing LCD module, obey the local environmental regulations.

12.8 OTHERS

1 、A strong incident light into LCD panel might cause display characteristics' changing inferior because of polarizer film, color filter, and other materials becoming inferior. Please do not expose LCD module direct sunlight land strong UV rays.

2、 Please pay attention to a panel side of LCD module not to contact with other materials in preserving it alone.

3、 For the packaging box, please pay attention to the followings:

4、Packaging box and inner case for LCD are designed to protect the LCDs from the damage or scratching during transportation. Please do not open except picking LCDs up from the box.

5、 Please do not pile them up more than 6 boxes. (They are not designed so.) And please do not turn over.

6、 Please handle packaging box with care not to give them sudden shock and vibrations. And also please do not throw them up.

7、Packing box and inner case for LCDs are made of cardboard. So please pay attention not to get them wet. (Such like keeping them in high humidity or wet place can occur getting them wet.)

13.0 Packing form-TBD

DCLTEK

深圳市丽台电子有限公司

Incoming Inspection Standards

来料检验标准

Model No. / 产品型号: **Applies More than 10.0 Inches Touch Display Screen**
Updated Date /生效日期: **2022-05-20**
Version / 版 本: **A0**
Customer confirmation : _____

Record of Revision /修订履历

Version /版本	Revision Record /修订内容	Reviser /修订人	Revision Date /修订日期
V0	首发 / Starting		2022.05.20

1.Scope of application /适用范围.

This document shall be applied to more than 10.0 inches touch display screen.

本文件适用于5.5~10.0 寸触摸显示屏.

2.Inspection conditions and environment /检验条件与环境.

2. 1 Inspection Conditions /检验条件:

(1) Inspection Distance /检测距离: 35cm ±5cm.

(2) Check time /检验时间：

Displays performance test /功能测试：3~5S /Image，Cosmetic Inspection /外观检验:12~15S.

(3) Check the viewing angle /检验视角:

Light-on Inspection Angle /点灯检验角度： ±45°.

Cosmetic Inspection Angle /外观检验角度：±45°.

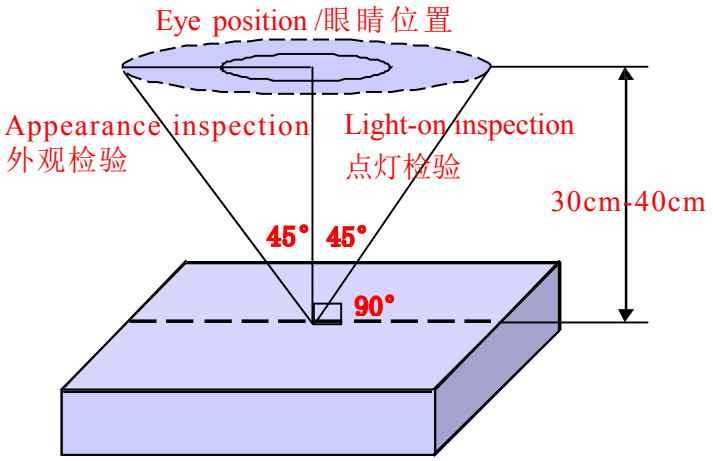

(Perpendicular to LCD panel surface /垂直于LCD表面)

2.2 Inspection environment /检验环境:

Ambient Temperature 温度		25℃±5℃
Ambient Humidity 湿度		55±5%RH
Ambient Illumination 亮度	Cosmetic Inspection 外观检验	800-1000 Lux
	Functional Inspection 点灯检验	200~300Lux

2.3 Sampling Conditions /抽样条件:

（1）Quantity to be inspected /批量：Quantity of shipment lot per model /单次运送单一型号数量.

（2）Sampling method /抽样方法：

Sampling Plan /抽样计划		GB/T 2828.1- 2003
		Normal Inspection ， Single Sampling 正常检验、单次抽样
		General inspection level： Ⅱ 一般检验水平：二级
AQL	Major Defect /主要缺陷	0.65
	Minor Defect /次要缺陷	1.0

（3）The classification of Major(MA) and Minor(MI) defects is shown as “3.1 Classification of defects”.

主缺(MA)及次缺(MI)定义于”3.1缺陷分类”.

3.Terms And Definitions /术语和定义

3.1 Classification of defects / 缺陷分类 :

（1）Major defects /主要缺陷:

A major defect is a defect that is likely to result in failure, or to reduce materially the usability of the product for its intended purpose .

可导致产品功能失效或减少产品可用性的缺陷.

（2）Minor defects /次要缺陷:

It will not cause the product to fail and reduce the defects in the effective use and operation of the product.

不会导致产品功能失效和减少产品的有效使用与操作的缺陷.

3.2 Point defects /点状缺陷：

The size of the point defect is defined by the diameter D, and the average diameter of the defect is D=1/2（W+L）.

点状缺陷的大小是由直径 D 定义的，缺陷的平均直径 D=1/2(W+L).

3.3 Linear defects /线状缺陷：

When defect size L≥2W,the defect count as liner type defect.Size of linear defect is defined by length (L) and the maximum width (W).

当缺陷尺寸 L≥2W 时，被视为线状缺陷，线状缺陷是由长度 (L) 和最大宽度 (W) 定义的.

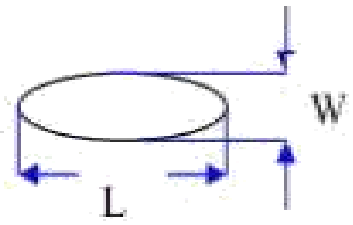

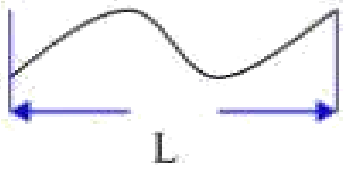

3.4 LCD sub-pixel dot /LCD子像素点

（1）Definition /定义 ：The point defect area is greater than 50% of the LCD sub-pixel area, and is visible through ND5% filter masking .

子像素点缺陷面积大于 50% LCD子像素面积, 且透过 ND5%遮盖是可见的.

（2）The drawing of 1/2 area sub-pixel definition / 1/2 面积的子像素定义绘图:

The 1/2 area sub-pixel can be defined as below one or more of specific shapes

1/2 面积的子像素可以定义为如下一个或多个特定形状图：

3.5 Small bright dot /细碎亮点 ：

Point defects smaller than "LCD sub-pixels" /小于“LCD子像素点”的点缺陷.

（Ratio of Zone I to Zone O /I 区与 O 区比例：1：2：1）

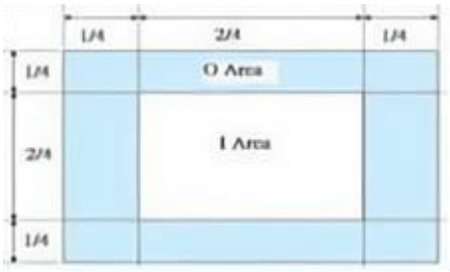

3.6 ND filter inspection method /ND卡的检验方法：

Hold the ND filter about 5cm above the display area, with your eyes 30-40cm away from the panel, and observe for 2~3 seconds.

在显示区域上方大约 5cm 处握住 ND 卡，眼睛距离面板 30-40cm，观察2~3 秒.

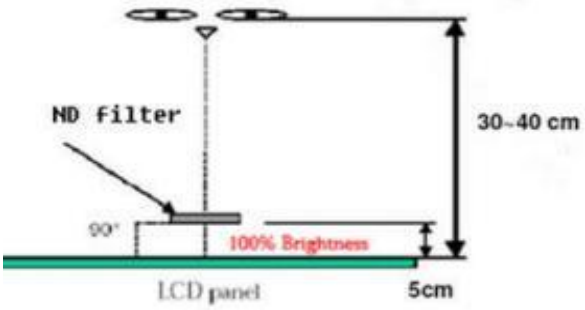

3.7 Any FPC surface problems that do not leak copper on the surface and do not cause functional failure are acceptable.
任何 FPC 表面问题，表面未露铜和不造成功能失效是可以接受.

3.8 Extraneous substances that can be wiped out ，like Finger point,Particles are not considered as a defect .
可以被擦拭干净的表面物质不视为缺陷 (如手指印，尘粒) .

3.9 Defects that can be covered by the material and are not visible in appearance are not considered defects.

能被物料覆盖，外观不可见的缺陷不视为缺陷.

3.10 Panel damage /面板损伤：

Glass damage outside the AA display area that does not affect the effective wiring is acceptable.

AA 显示区域以外的玻璃损伤，不影响有效线路是可以接受的.

3.11 Issues not specified or defined in this acceptance standard shall be handled through friendly negotiation between the two parties.

本允收标准中未规定或定义的问题，双方友好协商处理.

4. Inspection standards /检验标准

4.1 Structural Dimensions /结构尺寸规格

Serial Number 序号	Measurement items /测量项目		Specification /规格	Remark /备注
	名称 /Name	Unit /单位	Tolerance /公差	
1	Outside dimension：Length 尺寸：长	mm /毫米	0.15mm~0.30mm	Please refer to the product specification for detailed dimensions and tolerances 详细的尺寸规格和公差请参考产品规格书
2	Outside dimension：Width 尺寸：宽	mm /毫米	0.15mm~0.30mm	
3	Outside dimension：Thickness 尺寸：高	mm /毫米	0.30mm~0.50mm	

4.2 Appearance Inspection Specification /外观检验规格

(D： diameter, W： width, L： length, N： quantity, DS： spacing)

Inspection area 检验区域	Inspection items 检验项目	Inspection specifications 检验规格	Defect category 缺陷类别	
Glass 玻璃	Wire(on Array) 线路	Can't be damaged 不能损伤	MA	
	Chipping/corner breaking 崩边/破角	Can't affect the effective lines and functions 不能影响有效线路和功能	MA	
	Edge 边缘	There must be no extensional cracks 不可有延伸性裂纹	MA	
Silicone 硅胶	Silicone coating 硅胶涂布	The height must not exceed the LCD CF surface 高度不能超过LCD CF面		MI
	Glue overflow 溢胶	Can't cover FPC, POL, etc 不能覆盖到FPC、POL等		MI

Inspection area 检验区域	Inspection items 检验项目	Inspection specifications 检验规格	Defect category 缺陷类别	
PCBA FPC Connector 连接器	Appearance 外观	Scratches or injuries are not allowed to cause copper exposure 划伤或损伤不允许表面出现露铜		MI
	Component 元器件	Can't be damaged and lack 不能损伤和缺少	MA	
	Goldfinger oxidation 金手指氧化	Not allowed 不允许		MI
	Connection status 连接状况	The connection must be accurate and stable 必须准确稳定连接	MA	
	Break 破裂	Not allowed 不允许	MA	
	Soldering,: false soldering/tinning/tin beads 假焊/连锡/锡珠	Not allowed 不允许	MA	
POL 偏光片	Scratches 划伤	1. W≤0.10mm；L≤5mm，Ignore（忽略） 2. 0.10mm<W≤0.15mm ; L≤5mm ; N≤5 ; DS ≥10mm 3. 0.15mm＜W；5mm＜ L， Not allowable（不允许）		MI
	Dent 凹凸印	1. D≤0.25mm，Ignore（忽略） 2. 0.25mm＜D≤0.50mm；N≤5；DS≥10mm 3. 0.50mm＜D，Not allowable（不允许）		MI
	Bubbles 气泡	1. D≤0.25mm，Ignore（忽略） 2. 0.25mm＜D≤0.50mm；N≤5；DS≥10mm 3. 0.50mm＜D，Not allowable（不允许）		MI
	Point defects 点状不良	1. D≤0.25mm，Ignore（忽略） 2. 0.25mm＜D≤0.50mm；N≤5；DS≥10mm 3. 0.50mm＜D，Not allowable（不允许）		MI
	Edge bubbles 边缘气泡	1. Within 1/2BM of the display area, it is not allowed 显示区往外 1/2BM 区域内，不允许 2. The display area is 1/2 outside the BM area, and it is not controlled 显示区往外1/2BM区域以外，不管控		MI
	Dirty/watermarked 脏污/水印	No dirt/water lines/finger marks are allowed, and must be wiped clean 不允许有脏污/水印/手指印，须擦拭干净方可		MI
	Warping 起翘	Not allowed 不允许		MI
	Attaching offset 贴偏	It is necessary to completely cover the display area outward, within the 1/2BM area, or without leaking POL edges after TP is attached 需完整覆盖显示区往外、1/2BM区以内或贴合TP后不会出现漏偏光片边缘		MI
	Mixture 混料	Mixing different types of POL or not using POL as required by the BOM，not allowed 不允许混贴不同型号的POL或未按BOM要求使用POL	MA	

Inspection area 检验区域	Inspection items 检验项目	Inspection specifications 检验规格	Defect category 缺陷类别	
TP&CG	Point defects 点状不良	1. D≤0.25mm，Ignore（忽略） 2. 0.25mm＜D≤0.50mm；N≤5；DS≥10mm 3. 0.50mm＜D，Not allowable（不允许）		MI
	Scratches 划伤	1. W≤0.10mm；L≤5mm，Ignore（忽略） 2. 0.10mm<W≤0.15mm ; L≤5mm ; N≤5 ; DS≥10mm 3. 0.15mm＜W；5mm＜ L， Not allowable（不允许） 4. There is a feeling scratch，Not allowable 有感划伤，不允许		MI
	Edges and corners cracked 崩角/崩边	1. Product front / 产品正面： Edge and corner chipping is not allowed 崩角、崩边不允许 2. Product back /产品背面: X≤ 0.5 , Y≤0.5，Z≤1/2T；N≤5；DS≥10mm		MI
	Silk screen 丝印	The silk screen is clear, complete and correct 丝印清晰、完整、内容正确		MI
	Dirty 脏污	Non-wipeable dirt, not allowed 不可擦拭的脏污，不允许		MI
	Broken 破损	Not allowable 不允许	MA	
	Ink color aberration 油墨色差	ΔE>1，Not allowable（不允许）		MI
	Cover pinholes 针孔	1. D≤0.20mm , N≤5 , DS≥10mm，allowable 2. D＞0.20mm，intensive pinholes（密集型针孔），Not allowable（不允许）		MI
	IR holes IR孔	Dirt, deviation, color difference, etc. are not allowed 不允许脏污、偏位、色差等		MI
BL 背光	Backlight separation 背光分离	Not allowable 不允许		MI
	Deformation of rubber iron and rubber frame 胶铁、胶框变形	Use the plug gauge 0.3mm on the flat surface and can snap in and judge NG 在平面上使用塞规0.3mm卡翘曲位置，能卡进判定NG		MI
	The iron frame is oxidized and not tightened 铁框氧化、卡不紧	Not allowable 不允许		MI
	Backlight sticky solder beads, glue, etc 背面粘锡珠、残胶等	Not allowable 不允许		MI
	Lnkjet coding，Barcode， QR code 喷码/条码/二维码	The lnkjet coding is clear and complete, the barcode and QR code can be scanned normally, and the content and format match 喷码清晰完整、条码和二维码可正常扫描，内容和格式相符		MI
	Accessories (protective film, double-sided tape, insulating adhesive, etc.) 辅料（保护膜、双面胶、绝缘胶等）	Defects such as missing pastes, sticking deviations, defects, and fractures are not allowed 不允许有漏贴、贴偏、残缺、断裂等缺陷		MI

4.3 Electrical test specifications /电性检查规格
(D： diameter, W： width, L： length, N： quantity, DS： spacing)

Inspection items 检验项目	Inspection specifications 检验规格	Defect category 缺陷类别	
Glass bright spots/dark spots 玻璃亮点/暗点	1. D≤0.25mm，Ignore（忽略） 2. 0.25mm＜D≤0.50mm；N≤5；DS≥10mm 3. 0.50mm＜D，Not allowable（不允许）		MI
Mura	Use ND5% filter masking, visual invisibility is OK, 200~300Lux 使用ND5%遮盖，目视不可见即为OK，200~300Lux		MI
Small bright dot 细碎亮点	Use ND5% filter masking, visual invisibility is OK 使用ND5%遮盖，目视不可见即为OK		MI
Light leakage 漏光	1. Use ND5% filter masking, visual invisibility is OK 使用ND5%遮盖，目视不可见即为OK 2. If necessary, sign off on the sample 必要时，签限定样		MI
Backlight black/white dots 背光黑点/白点	1. D≤0.25mm，Ignore（忽略） 2. 0.25mm＜D≤0.50mm；N≤5；DS≥10mm 3. 0.50mm＜D，Not allowable（不允许）		MI
Linear foreign bodies 线状异物（异物毛丝等）	1. W≤0.10mm；L≤5mm，Ignore（忽略） 2. 0.10mm<W≤0.15mm ; L≤5mm ; N≤5 ; DS≥10mm 3. 0.15mm＜W；5mm＜ L，Not allowable（不允许）		MI
Black/White Print 黑印/白印	Use ND5% filter masking, visual invisibility is OK 使用ND5%遮盖，目视不可见即为OK		MI
The display is uneven 显示不均匀	Use ND5% filter masking, visual invisibility is OK 使用ND5%遮盖，目视不可见即为OK		MI
The brightness is uneven 亮度不均匀	Brightness uniformity＜85.0%，Not allowable 亮度均匀性＜85.0%，不允许		MI
Displacement of the membrane 膜材移位	Not allowable 不允许		MI
Interference pattern/Newtonian pattern 干涉纹/牛顿纹	Not allowable 不允许		MI
Display abnormal 显示异常	Not allowable 不允许	MA	
No display 无显示	Not allowable 不允许	MA	
Line/Missing Drawing 线条/缺画	Not allowable 不允许	MA	
Splash screen 闪屏	Not allowable 不允许	MA	
LCD grid LCD网格	Not allowable 不允许	MA	
Afterimage 残影	Not allowable 不允许	MA	
Wrong viewing angle 视角错误	Not allowable 不允许	MA	
No touch 无触摸	Not allowable 不允许	MA	
Touch the jump point 触摸跳点	Not allowable 不允许	MA	
Not sensitive 触摸不灵敏	Not allowable 不允许	MA	