Request information

PRODUCT SPECIFICATION
TFT-LCD MODULE

Module No: 312271-01

☑ Preliminary Specification

☐ Approval Specification

Designed by	Checked by	Approved by

Final Approval by Customer

Approved by	Comment

For more information, contact us:

WWW.DCLTEK.COM | 1-800-407-8917 | SALES@DCLTEK.COM

※Thespecificationof“TBD”shouldrefertothemeasuredvalueofsample.Ifthereisdifferencebetweenthedesignspecification andmeasuredvalue,wenaturallyshallnegotiateandagreetosolutionwithcustomer.

This document contains confidential and proprietary information of DCL Technologies, Inc. It is provided solely for the recipient's evaluation and may not be reproduced, disclosed, or distributed, in whole or in part, without the prior written consent of DCL Technologies, Inc.

1. Document Revision History

Version	Contents	Date	Note
V0	Initial version	2026.02.05	

2. General Description

N0	Item	Specification	Unit	Remark
1	LCD Size	TFT"5.7	inch	-
2	Panel Type	IPS	-	-
3	Display Resolution	640x RGB x 480	pixel	-
4	Display mode	Normally Black	-	-
5	Display colors	16.7M	-	-
6	Viewing Direction	ALL	-	-
7	CTP+LCM Module Size	127.00 (H) x98.43(V) x8.25(T)	mm	Note
8	Active Area	115.20 (H) x 86.40 (V)	mm	Note
9	Pixel Pitch	0.18(H) x 0.18(V)	mm	-
10	Weight	147.5	g	-
11	Driver IC	JD9168S	-	-
12	Light Source	white LED	-	-
13	Interface	24bit-RGB	-	-

Note：Please refer to the mechanical drawing；

3.EXTERNAL DIMENSIONS

This document contains confidential and proprietary information of DCL Technologies, Inc. It is provided solely for the recipient's evaluation and may not be reproduced, disclosed, or distributed, in whole or in part, without the prior written consent of DCL Technologies, Inc.

Front View

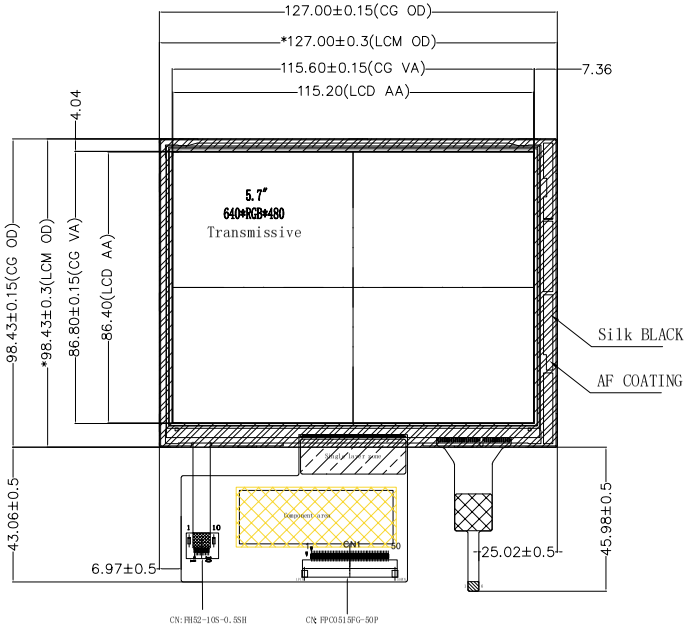

Side View

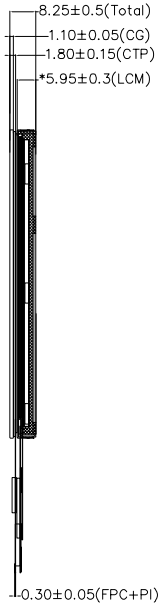

Back View

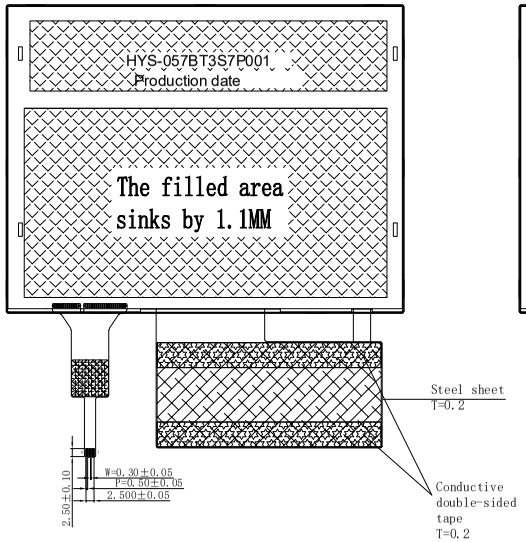

Back View

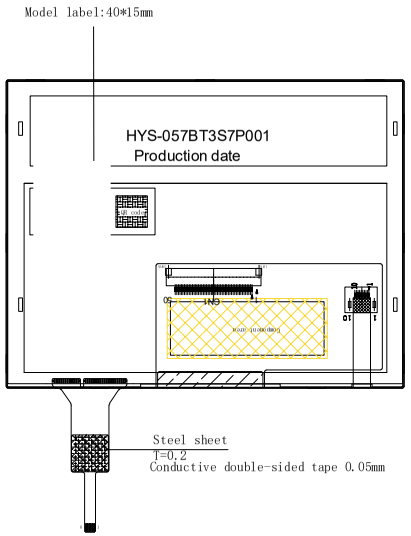

PIN DESCRIPTION

1	LED_A
2	LED_A
3	LED_K
4	LED_K
5	GND
6	NC
7	DVDD
8	MODE
9	DE
10	VS
11	HS
12	B7
13	B6
14	B5
15	B4
16	B3
17	B2
18	B1
19	B0
20	G7
21	G6
22	G5
23	G4
24	G3
25	G2
26	G1
27	G0
28	R7
29	R6
30	R5
31	R4
32	R3
33	R2
34	R1
35	R0
36	GND
37	DCLK
38	GND
39	L/R
40	U/D
41	NC
42	NC
43	NC
44	RESET
45	NC
46	NC
47	STBYB
48	SCL
49	SDA
50	CS

TP PIN ASSIGNMENT	
1	VCC
2	WAKE
3	INT
4	SCL
5	SDA
6	GND

BL	
1	NC
2	A
3	K1
4	K2
5	K3
6	K4
7	K5
8	K6
9	K7
10	NC

Notes:
1. Display : 5.7″, TFT
2. Resolution: 640xRGBx480
3. LCD Viewing Direction: All
5. Display Mode: Normally Black
6. LCM+CTP Brightness: 400cd/m²(TYP)
7. unmark Tolerance:±0.2
8. OPERATING TEMP: -30° C~+80° C
9. STORAGE TEMP: -30° C~+80° C
10. Requirements on Environmental Protection: ROHS
11. Critical Dimensions Under Strict Control: “*”

CTP NOTE:
1. G+G+FPC+OCA
   LENS GLASS: 1.1mm
   SENSOR GLASS: 0.55mm
   IC: FT7311
2. Operation Voltage: 2.8V-3.3 V
3. Transmittance: ≥82%
4. The cover hardness: 6H
5. OPERATING TEMP: -30° C~ +80° C
6. STORAGE TEMP: -30° C~ +80° C
7. Requirements on Environmental Protection: ROHS

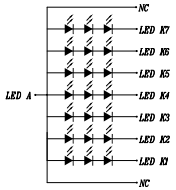

3*7=21EA If=140mA

REV	DESCRIPTION	DATE	NAME
3			
2			
1			
0	NEW	2026.02.05	

SCALE:1/1	UNIT:mm	PAGE:1/1	Approve	Check	Drawn
Part No:	312271-01	VER:V0			
Customer No:					

DCL TEK

4. Interface Specification

NO.	Symbol	Function	Remark
1	LEDA	POWER SUPPLY- FOR BACKLIGHT CATHODE	
2	LEDA	POWER SUPPLY- FOR BACKLIGHT CATHODE	
3	LEDK	POWER SUPPLY+ FOR BACKLIGHT ANODE	
4	LEDK	POWER SUPPLY+ FOR BACKLIGHT ANODE	
5	GND	Power ground	
6	NC	No connection	
7	DVDD	Power for Digital Circuit 3.3V	
8	MODE	DE/SYNC mode select. MODE=H:DE mode;MODE=L:SYNC mode	
9	DE	Data enable signal in RGB I/F mode 1	
10	VS	Vertical sync. Signal in RGB I/F	
11	HS	Horizontal sync. Signal in RGB I/F	
12~19	B7~B0	8 bit data bus display blue data	
20~27	G7~G0	8 bit data bus display green data	
28~35	R7~R0	8 bit data bus display red data.	
36	GND	Power ground	
37	DCLK	Pixel clock signal in RGB I/F	
38	GND	Power ground	
39	L/R	Left / right selection	
40	U/D	Up/down selection	
41	NC	No connection	

42	NC	No connection	
43	NC	No connection	
44	RESET	Global reser pin	
45	NC	No connection	
46	NC	No connection	
47	STBYB	STBYB_EN: Control hardware STBYB_EN pin function. No connection	
48	SCL	（No connection） Serial port CLK	
49	SDA	No connection） Serial port data	
50	CS	No connection） Chip select signal	

5. Electrical Characteristics

5.1 TFT DC Characteristics

Characteristics	Symbol	Min.	Typ.	Max.	Unit	Note
TFT OperationFrame rate	Hz	--	60	--	Hz	-
Supply Voltage for(DC/DC)	DVDD	3.0	3.3	3.3	V	-

5.2.LED Backlight Specification

Item	Symbol	Min	Typ	Max	Unit	Notes
Forward voltage	Vf	-	9.0	9.9	V	-
Forward current	IF	-	140	-	mA	-
Luminance(LCM+CTP)	Lv	-	400	-	cd/m2	-
LED life time	N/A	-	30,000	-	Hr	

Note:The“LEDlifetime”isdefinedasthemodulebrightnessdecreaseto50%oforiginalbrightnessat

IL=20mA/LED.TheLEDlifetimecouldbedecreasedifoperatingILislargerthan25mA/LED.

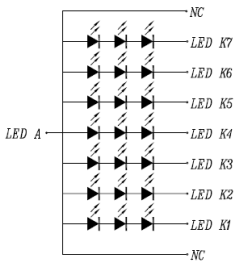

3*7=21EA If=140mA

6.CTP Features

Item	Specification
Structure	G+G+FPC+OCA
Coverlens OD	127.00（H）*98.43（V）*1.1（T）
Coverlens VA	115.60（H）*86.80（V）
Touch Driver IC	FT7311
Touch Interface	I2C

7.CTP Mechanical

Item	Description	Note
Cover plate hardness test	6H Pencil Pressure:1N/45°	Hardness ≥ 6H
Operate	Finger	
Surface hardness (H)	≥6H	

8.CTP Interface Specification

NO.	Name	Description
1	CTP_VCC	Touch panel Power supply 2.8~3.3V
2	CTP_RST	Touch panel reset
3	CTP_INT	Touch panel interrupt output
4	CTP_SCL	Touch panel I2C clock
5	CTP_SDA	Touch panel I2C data
6	CTP_GND	Power ground

8.1 Electrical Specifications

8.1.1 Absolute maximum ratings

Symbol	Parameter	Unit	Value	Note
VCI	Analog Supply Voltage	V	-0.3 to +6.3	Note(3) (4)
IOVCC	Interface Supply Voltage	V	-0.3 to +3.6	Note(3),(4)
VCCH	High speed interface Supply Voltage	V	-0.3 to +3.6	Note(3) (5)
AVDD	Positive Voltage input	V	-0.3 to +6.3	Note(6)
AVEE	Negative Voltage input	V	-0.3 to -6.3	Note(7)
VGH	Power Supply Voltage	V	-0.3 to +23	Note(8)(10)
VGL	Power Supply Voltage	V	-0.3 to -17	Note(9)(10)
Top	Operating Temperature	°C	-40 to +85	Note(11)
Tstg	Storage Temperature	°C	-55 to +110	Note(12)

Note: (1) Permanent device damage may occur if absolute maximum conditions are exceeded.
(2) Functional operation should be restricted to the conditions described under DC Characteristics.
(3) IOVCC, VSSD must be maintained.
(4) To make sure IOVCC ≥ VSSD, VCI≥ VSSP .
(5) To make sure VCCH ≥ VSSH.
(6) To make sure AVDD ≥ AVSS.
(7) To make sure AVSS ≥ AVEE
(8) To make sure VGH ≥ AVSS.
(9) To make sure AVSS ≥ VGL
(10) VGH +|VGL| < 30V
(11) For die and wafer products, specified up to +85℃.
(12) This temperature specifications apply to the COG package.

Table：Absolute maximum ratings

8.2. DC characteristics

8.2.1.RGB Interface DC electrical characteristics

(T_A=-40 ~ 85 °C)

Item	Symbol	Condition	Min.	Typ.	Max.	Unit
VCI	V_{IN}	Analog Supply Voltage	2.5	-	6.0	
IOVCC	V_{IN}	Interface Supply Voltage	2.5	-	3.3	
AVDD	V_{IN}	Analog Supply Voltage	4.5	-	6.0	
AVEE	V_{IN}	Analog Supply Voltage	-4.5	-	-6.0	
VCCH	V_{IN}	High speed interface Supply Voltage	2.5	-	3.3	
Input high voltage	V_{IH}	IOVCC= 2.5 ~ 3.3V VCIP= 2.5 ~ 6.0V VCI= 2.5 ~ 6.0V	0.7 x IOVCC	-	IOVCC	V
Input low voltage	V_{IL}		0	-	0.3 x IOVCC	V
Output high voltage (SDA, GPIO)	V_{OH1}	I_{OH} = -1.0 mA	0.8 x IOVCC	-	IOVCC	V
Output low voltage (SDA, GPIO)	V_{OL1}	IOVCC= 2.5 ~ 3.3V I_{OL} = 1.0 mA	0	-	0.2 x IOVCC	V
Logic High level input current	I_{IH}	VSYNC, HSYNC	-	-	1	μA
		RESX, SCL, CSX,	-	-	1	μA
	I_{IHD}	DB[23…0], SDA	-	-	1	μA
		DB[23…0]	-	-	1	μA
Logic Low level input current	I_{IL}	VSYNC, HSYNC	-1	-		μA
		RESX, CSX, SCL	-1	-		μA
	I_{ILD}	DB[23…0], SDA	-1	-		μA
		DB[23…0]	-1	-		μA
Current consumption standby mode (VCIP/VCI-VSSD)	$I_{ST(VDD)}$	VCI/VCCH=3.3V, IOVCC=3.3V T_A =25°C	-	TBD	-	μA
Current consumption standby mode (IOVCC– VSSD)	$I_{ST(IOVCC)}$		-	TBD	-	μA
Current consumption during Deep-standby mode (VCIP/VCI-VSSD)	$I_{DP-ST(VDD)}$	VCI/VCCH=3.3V, IOVCC=3.3V T_A =25°C	-	TBD	-	μA
Current consumption during Deep-standby mode (IOVCC– VSSD)	$I_{DP-ST(IOVCC)}$		-	TBD	-	μA

Table : RGB Interface DC characteristic

8.3. AC characteristics

8.3.1.Reset input timings

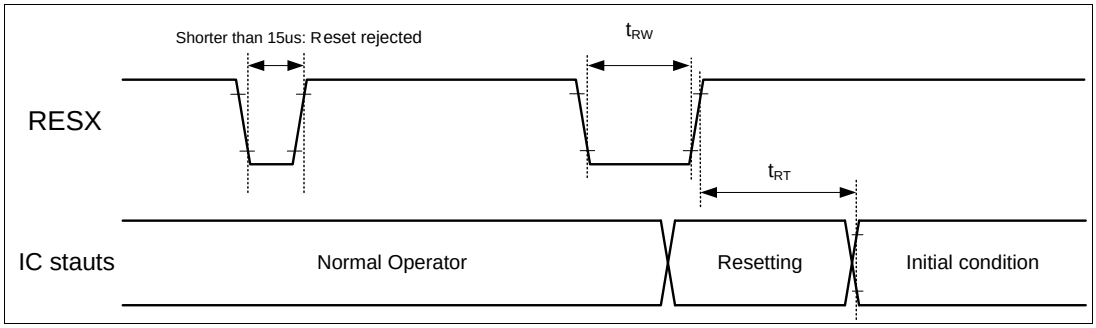

Figure 11.2: Reset input timings

Symbol	Parameter	Related pins	Min.	Max.	Unit
t_{RW}	Reset "L" pulse width(2)	RESX	20	-	µs
t_{RT}	Reset complete time(3)	-	-	5(5)	ms
		-	-	120(6) (7) (8)	ms

Note:

(1) The reset complete time also required time for loading ID bytes from OTP to registers. This loading is done every time when there is HW reset complete time (t_{RT}) within 5 ms after a rising edge of RESX.

(2) Spike due to an electrostatic discharge on RESX line does not cause irregular system reset according to the table below.

RESX Pulse	Action
Shorter than 15 µs	Reset Rejected
Longer than 20 µs	Reset
Between 15 µs and 20 µs	Reset Start

(3) During the resetting period, the display will be blanked (The display is entering blanking sequence, which maximum time is 120 ms, when Reset Starts in Sleep Out –mode. The display remains the blank state in Sleep In –mode) and then returns to Default condition for H/W reset.

(4) Spike Rejection also applies during a valid reset pulse as shown below:

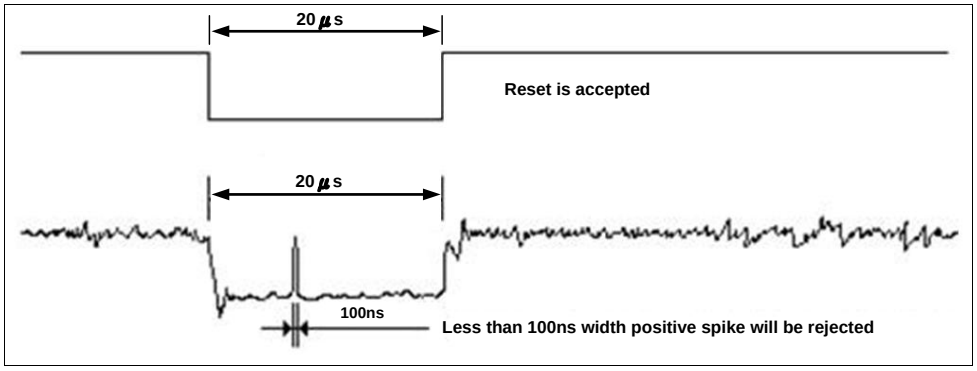

Table : Reset timings

(5) When Reset is applied during Sleep In Mode.
(6) When Reset is applied during Sleep Out Mode.
(7) It is necessary to wait 5msec after releasing RESX before sending commands. Also Sleep Out command cannot be sent for 120msec.

(8) After Sleep Out command, it is necessary to wait 120msec then send RESX.

8.3.2.Timings for DSI Video mode

Vertical Timings

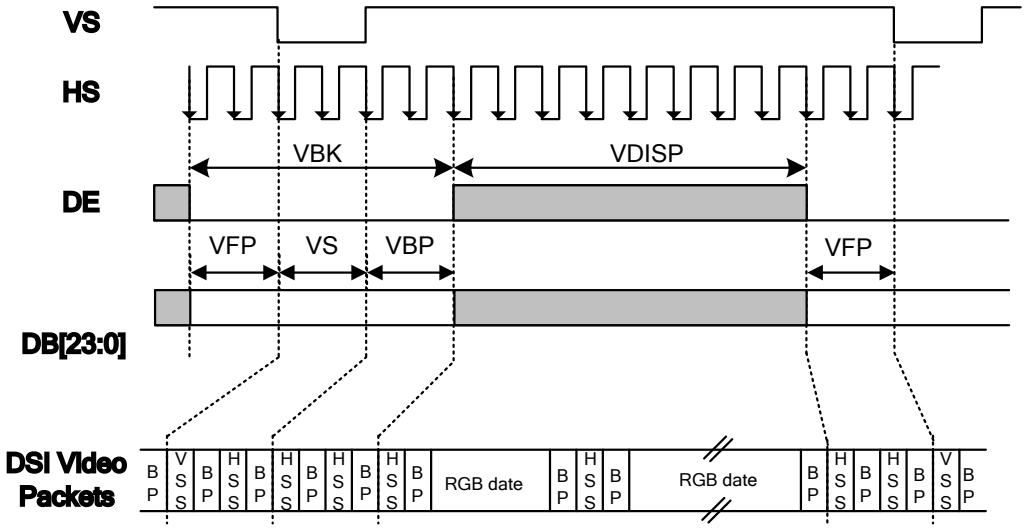

Figure 11.12: Vertical Timings for DPI I/F

Resolution=800x480 (T_A=25°C, IOVCC=3.3V, VCI=3.3V)

Item	Symbol	Condition	Min.	Typ.	Max.	Unit
Vertical low pulse width	VS	-	2	-	Note(1)	Line
Vertical front porch	VFP	-	2	-	-	Line
Vertical back porch	VBP	-	2	-	Note(1)	Line
Vertical blanking period	VBK	VS+VBP+VFP	6	-	-	Line
Vertical active area	-	VDISP	-	480	-	Line
Vertical Refresh rate	VRR	-	-	60	-	Hz

Note: The VS and VBP pulse width are related to GIP start pulse and GIP clock pulse timing. The GIP start pulse and GIP clock pulse must be set at corresponding position for LCD normal display.

Resolution=1024x600 (T_A=25°C, IOVCC=3.3V, VCI=3.3V)

Item	Symbol	Condition	Min.	Typ.	Max.	Unit
Vertical low pulse width	VS	-	2	-	Note(1)	Line
Vertical front porch	VFP	-	2	-	-	Line
Vertical back porch	VBP	-	2	-	Note(1)	Line
Vertical blanking period	VBL	VS+VBP+VFP	6	-	-	Line
Vertical active area	-	VDISP	-	600	-	Line
Vertical Refresh rate	VRR	-	-	60	-	Hz

Note: The VS and VBP pulse width are related to GIP start pulse and GIP clock pulse timing. The GIP start pulse and GIP clock pulse must be set at corresponding position for LCD normal display.

Table : Vertical Timings for DSI Video I/F

Horizontal Timings

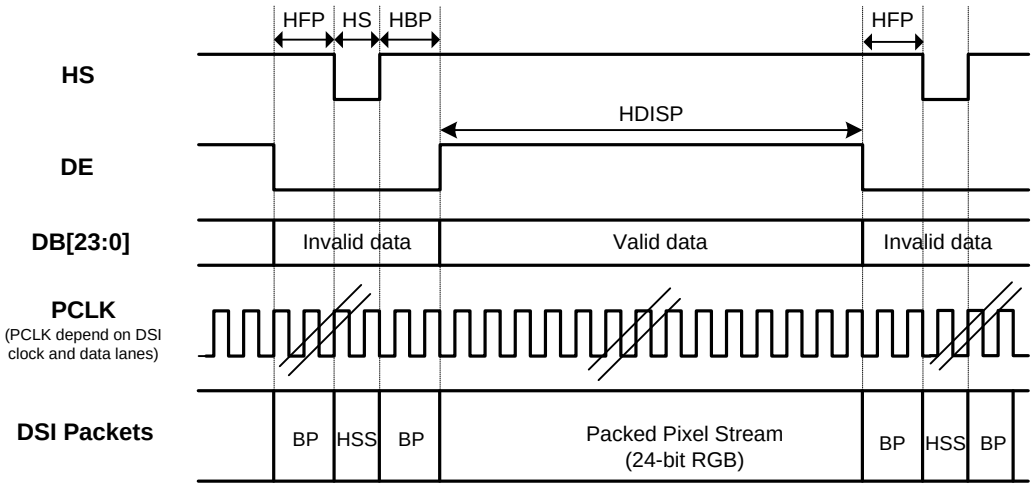

Figure : Horizontal Timing for DSI Video mode I/F

RGB Resolution=800x480 (T_A=25°C,VCCH=IOVCC=3.3V, VCI=3.3V)

Item	Symbol	Condition	Min.	Typ.	Max.	Unit
HS low pulse width	HS	-	100			ns
Horizontal back porch	HBP	-	100			ns
Horizontal front porch	HFP	-	400			ns
Horizontal blanking period	HBLK	HS+HBP+HFP		900(1)		ns
Horizontal active area	HDISP	800 pixels	-	12(2)	-	us

Note:

1. Below time limitation will apply in all DSI speed range.
   (1) HS+HBP >= 500ns.
   (2) HFP >= 400ns.
2. Base on frame rate = 60HZ,
   (1) VS=2, VBP=2 and VFP=2.

RGB Resolution=1024x600 (T_A=25°C,VCCH=IOVCC=3.3V, VCI=3.3V)

Item	Symbol	Condition	Min.	Typ.	Max.	Unit
HS low pulse width	HS	-	100	-	-	ns
Horizontal back porch	HBP	-	100	-	-	ns
Horizontal front porch	HFP	-	400	-	-	ns
Horizontal blanking period	HBLK	HS+HBP+HFP	-	900(1)	-	ns
Horizontal active area	HDISP	1024 pixels	-	12(2)	-	us

Note:

1. Below time limitation will apply in all DSI speed range.
   (1) HS+HBP >= 500ns.
   (2) HFP >= 400ns.
2. Base on frame rate = 60HZ,
   (1) VS=2, VBP=2 and VFP=2.

Table : Horizontal Timings for DSI Video mode I/F

9.0 OPTICAL CHARACTERISTICS

9.1 Optical Specification

Item		Symbol	Condition	Min.	Typ.	Max.	Unit	Note
Transmittance (with Polarizer)		T (%)	Θ=0 Normal viewing angle	4.57	5.08	—	%	Measuring with normal polarizer，Reference Only Base on Vop= 5.1 V
Transmittance (without Polarizer)		T (%)		15.84	17.60		%	
Contrast Ratio		CR		1000	1500		—	(1)(2)
Response Time		$T_{R+}T_F$		—	30	35	msec	(1)(3)
Color Gamut	(%)			55	60	—	%	C-light
Color Chromaticity (CIE1931)	White	W_x		-0.02	0.300	+0.02	—	(1)(4) CF glass C-light
		W_y			0.336			
	Red	R_x			0.643		—	
		R_Y			0.326			
	Green	G_x			0.289		—	
		G_Y			0.557			
	Blue	B_x			0.137		—	
		B_Y			0.145			
Viewing Angle	Hor.	$Θ_L$	CR>10	85	89	—	—	(1)(4) Measuring with normal polarizer，Reference Only
		$Θ_R$		85	89	—		
	Ver.	$Θ_U$		85	89	—		
		$Θ_D$		85	89	—		
Optima View Direction		Free						(5)

Measuring Condition

- Measuring surrounding dark room
- Ambient temperature 25±2°C
- 15min. warm-up time.

9.2 Measuring Equipment

- FPM520 of Westar Display technologies, INC., which utilized SR-3 for Chromaticity and BM-5A for other optical characteristics.

Note (1) Definition of Viewing Angle:

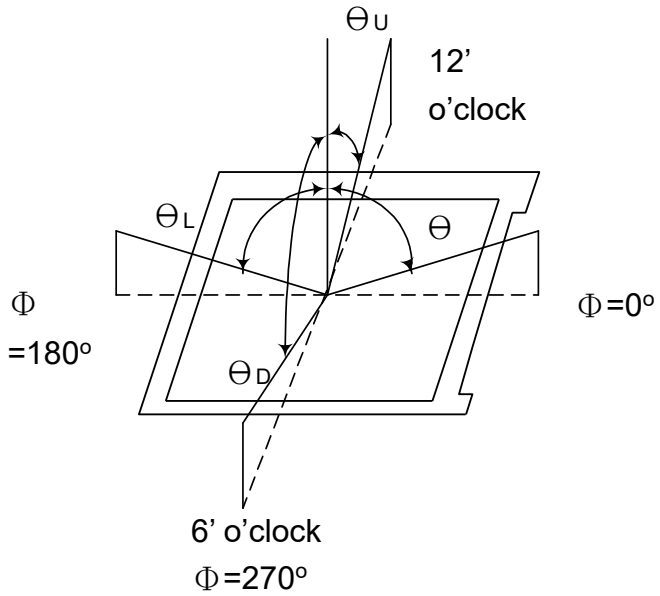

Note (2) Definition of Contrast Ratio (CR) :
measured at the center point of panel

$$CR = \frac{\text{Luminance with all pixels white}}{\text{Luminance with all pixels black}}$$

Note (3) Definition of Response Time : Sum of T_R and T_F

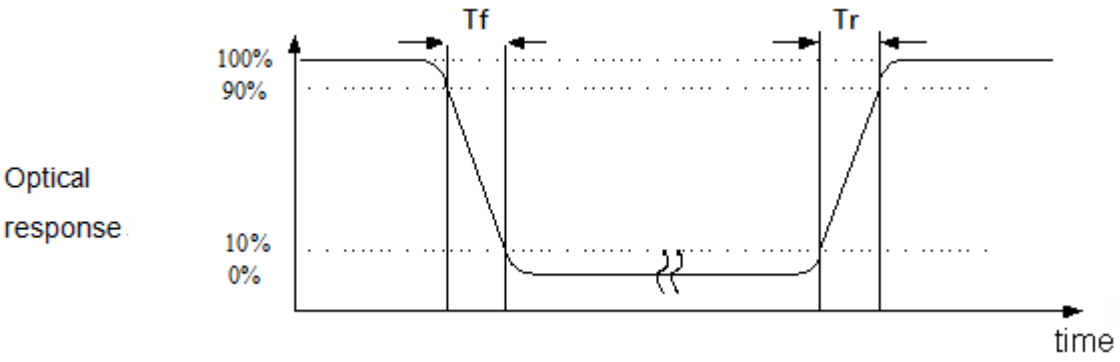

10. Reliability test items

No.	Test Item	Test Condition	Notes
1	High Temp. Storage	+80°C / 48H	1. Functional test isOK. Missing Segment,short, unclear segment non-display,display abnormally and liquid crystal leakare un-allowed. 2. No low temperature bubbles,end seal loose andfall, frame rainbow.
2	Low Temp. Storage	-30°C / 48H	
3	High Tempe. Operating	+80°C / 48H	
4	Low Tempe. Operating	-30°C / 48H	
5	High Temperature /Humidity storage	50°C x 90%RH /48H	
6	Thermal and cold shock	Static state， -20℃（30min） ~60℃（30min），50 cycles	
7	Electro-static discharge test (non-operating)	Air : 150 pF, 330Ω, 8 KV Contact : 150 pF, 330Ω, 4 KV	

Note: All tests above are practiced at module type.

There is no display function NG issue occurred, All the cosmetic specification is judged before the reliability stress.

11.0 General Precaution

11.1 Use Restriction

This product is not authorized for use in life supporting systems, aircraft navigation control systems, military systems and any other application where performance failure could be life-threatening or otherwise catastrophic.

11.2 Asembly Precaytton

1、Please use the mounting hole on the module side in installing and do not bending or wrenching LCD in assembling. And please do not drop, bend or twist LCD module in handling.

2、Please design display housing in accordance with the following guide lines.

3、Housing case must be destined carefully so as not to put stresses on LCD all sides and not to wrench module. The stresses may cause non-uniformity even if there is no non-uniformity statically.

4、Keep sufficient clearance between LCD module back surface and housing when the LCD module is mounted. The clearance in the design is recommended taking into account the tolerance of LCD module thickness and mounting structure height on the housing.

5、 Please do not push or scratch LCD panel surface with any-thing hard. And do not soil LCD panel surface by touching with bare hands. (Polarizer film, surface of LCD panel is easy to be flawed.)

6、Please do not press any parts on the rear side such as source IC, gate IC, and FPC during handling LCD module. If pressing rear part is unavoidable, handle the LCD module with care not to damage them.

7、Please wipe out LCD panel surface with absorbent cotton or soft cloth in case of it being soiled.

8、 Please wipe out drops of adhesives like saliva and water on LCD panel surface immediately. They might damage to cause panel surface variation and color change. 11.2.7 Please do not take a LCD module to pieces and reconstruct it. Resolving and reconstructing modules may cause them not to work well.

11.3 Disassembling or Modification

Do not disassemble or modify the module. It may damage sensitive parts inside LCD module, and may cause scratches or dust on the display. does not warrant the module, if customers disassemble or modify the module.

11.4 Breakage of LCD Panel

1 、If LCD panel is broken and liquid crystal spills out, do not ingest or inhale liquid crystal, and do not contact liquid crystal with skin.

2、 If liquid crystal contacts mouth or eyes, rinse out with water immediately.

3、 If liquid crystal contacts skin or cloths, wash it off immediately with alcohol and rinse thoroughly with water.

4、 Handle carefully with chips of glass that may cause injury, when the glass is broken.

11.5 Absolute Maximum Ratings and Power Protection Circuit

1、Do not exceed the absolute maximum rating values, such as the supply voltage variation, input voltage variation, variation in parts' parameters, environmental temperature, etc., otherwise LCD module may be damaged.

2、 Please do not leave LCD module in the environment of high humidity and high temperature for a long time.

3、 It's recommended employing protection circuit for power supply.

11.6 Operation

1 、Do not touch, push or rub the polarizer with anything harder than HB pencil lead.Use fingerstalls of soft gloves in order to keep clean display quality, when persons handle the LCD module for incoming inspection or assembly.

2、 When the surface is dusty, please wipe gently with absorbent cotton or other soft material.

3 、Wipe off saliva or water drops as soon as possible. If saliva or water drops contact with polarizer for a long time, they may causes deformation or color fading.

4 、When cleaning the adhesives, please use absorbent cotton wetted with a little petroleum benzine or other adequate solvent.

11.6 Static Electricity

1 、Protection film must remove very slowly from the surface of LCD module to prevent from electrostatic occurrence.

2、 Because LCD module uses CMOS-IC on TFT-LCD panel, it is very weak to electrostatic discharge. Please be careful with electrostatic discharge.

3 、Persons who handle the module should be grounded through adequate methods.

11.7 Disposal

When disposing LCD module, obey the local environmental regulations.

11.8 OTHERS

1 、A strong incident light into LCD panel might cause display characteristics' changing inferior because of polarizer film, color filter, and other materials becoming inferior. Please do not expose LCD module direct sunlight land strong UV rays.

2、 Please pay attention to a panel side of LCD module not to contact with other materials in preserving it alone.

3、 For the packaging box, please pay attention to the followings:

4、Packaging box and inner case for LCD are designed to protect the LCDs from the damage or scratching during transportation. Please do not open except picking LCDs up from the box.

5、 Please handle packaging box with care not to give them sudden shock and vibrations. And also please do not throw them up.

6、Packing box and inner case for LCDs are made of cardboard. So please pay attention not to get them wet. (Such like keeping them in high humidity or wet place can occur getting them wet.)

12.0 Packing form-TBD

DCLTEK

Incoming Inspection Standard

品质允收标准

Model N0. /产品型号: Applicable to Touch Screen

Updated Date /生效日期: 2025.04.01

Version / 版 本 号: V0

Record of Revision /修订履历.

Version /版本号	Revision Record /修订内容	Reviser /修订人	Revision Date /修订日期
V0	首发 / Initial release		2025.04.01

1、Scope of application /适用范围.

Applicable to Touch Screen.

2、Inspection conditions and environment / 检验条件与环境.

2.1、Inspection Conditions / 检验条件:

2.1.1、Inspection Distance / 检测距离: 35cm ±5cm.

2.1.2、Inspection time /检验时间：Displays performance test /功能测试：2~3S /Image，

Appearance Inspection / 外观检验：8~10S.

2.1.3、Inspection the viewing angle /检验视角:

Display Inspection Angle /显示检验角度： ±45°.

Appearance Inspection Angle /外观检验角度：±45°.

Eye position /眼睛位置：

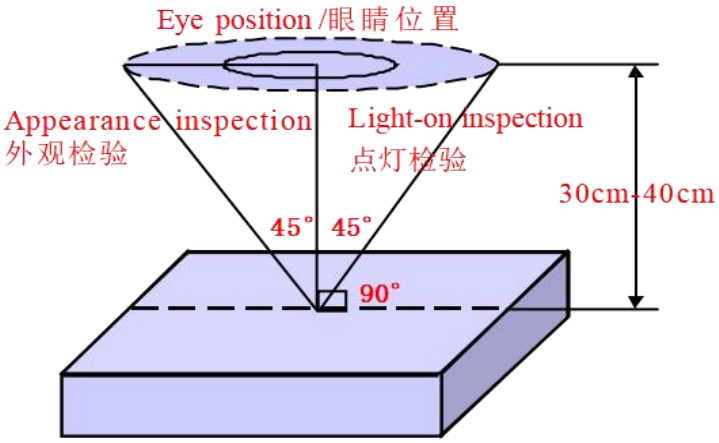

(Perpendicular to LCD panel surface /垂直于LCD表面)

2.2、 Inspection environment /检验环境：

Temperature / 温度		25±5℃
Humidity / 湿度		55±5%RH
Brightness 亮度	Appearance Inspection / 外观检验	800~1000 Lux
	Display Inspection / 功能检验	200~300 Lux

2.3、Sampling conditions / 抽样方式.

Sampling Plan /抽样计划		GB/T 2828.1- 2003
		Batch single sampling/批量单次抽样
		General inspection level：Ⅱ/一般检验水平：二级
AQL	Major Defect /主要缺陷	0.25
	Minor Defect /次要缺陷	0.65

3、Terms and definitions /术语和定义.

3.1、Defect classification / 缺陷分类：

3.1.1、Major defects /主要缺陷: Defects that cause the product to fail or reduce the usability of the product / 引起产品功能失效和减少产品的有效使用与操作的缺陷.

3.1.2、Minor defects / 次要缺陷: Defects that do not affect the functionality and effective use and operation of the product / 不影响产品功能和有效使用与操作的缺陷.

3.2、Point defects / 点状缺陷：

The size of a punctate defect is defined by the diameter D, and the average diameter of the defect is D=1/2(W+L) / 点状缺陷由直径 D 定义大小，缺陷的平均直径 D=1/2(W+L).

3.3、line defects / 线状缺陷：

When defect size L ≥ 2W,the defect count as liner type defect.Size of linear defect is defined by length (L) and the maximum width (W)

当缺陷尺寸 L≥2W 时，被视为线状缺陷，线状缺陷是由长度（L）和最大宽度（W）定义的.

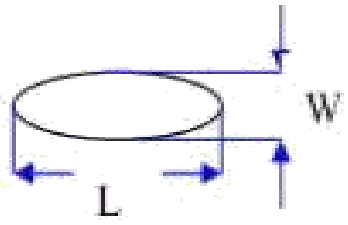

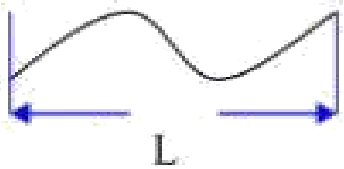

3.4、LCD sub-pixels / LCD 子像素点:

The sub-pixel defect area is greater than 50% of the LCD sub-pixel area, and is visible through ND5% masking

子像素点缺陷面积大于 50% LCD 子像素面积, 且透过 ND5%遮盖是可见的.

3.5、ND card test method / ND 卡检验方法:

Hold the ND card about 5cm above the display area, with your eyes 30-40cm away from the panel, and observe for 2~3 seconds

在显示区域上方大约 5cm 处握住 ND 卡，眼睛距离面板 30-40cm，观察 2~3 秒.

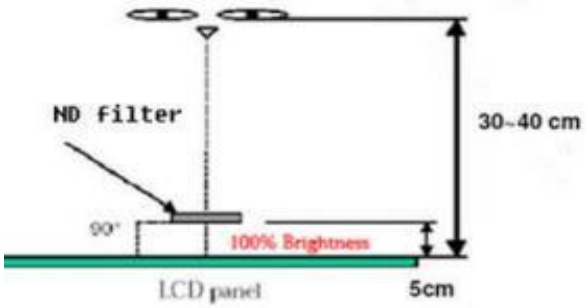

3.6、Surface substances that can be cleaned are not considered defects (e.g. finger prints on the protective film, dust particles)

可以被清洁干净的表面物质不视为缺陷 (如保护膜上的手指印，尘粒) .

3.7、Defects that can be covered by the material and are not visible to the eye, and do not affect the function and use are not considered defects

能被物料覆盖目视不可见，且不影响功能与使用的缺陷不视为缺陷.

3.8、AA shows that damage to the glass outside the area does not affect the effective line and does not expand the loss is acceptable

AA 显示区域以外的玻璃损伤，不影响有效线路和不会在扩大损失的是可以接受的.

3.9、Issues not specified or defined in this document shall be dealt with through friendly negotiation between the parties / 本文件中未规定或定义的问题，双方友好协商处理.

4.0、Inspection standards /检验标准:

4.1、Structural size standards / 结构尺寸标准:

Measurement items /测量项目		Specification /规格	Remark /备注
Name/名称	Unit /单位	Tolerance /公差	
Outside dimension：Length 尺寸：长	mm /毫米	0.10mm~0.3mm	Please refer to the product specification for detailed dimensions and tolerances 详细的尺寸规格和公差请参考产品规格书
Outside dimension：Width 尺寸：宽	mm /毫米	0.10mm~0.3mm	
Outside dimension：Thickness 尺寸：厚	mm /毫米	0.20mm~0.50mm	

4.2、Appearance Inspection standards:

(D ： diameter, W ： width, L ： length, N ： quantity, DS ： spacing)

Material 检验区域	Inspection items 检验项目	Product size 适用尺寸	Inspection standards 检验规格	Category 缺陷类别	
LCD	ITO	Full size 全尺寸	ITO can't open circuit, short circuit, ITO notch cannot exceed 70% of width. ITO 不能有开路和短路，ITO 缺口不能超过宽度的 70%.	MA	
	Corners broken 崩边/崩角	Full size 全尺寸	1、It cannot affect the appearance of valid routes and functions; 不能影响有效线路和功能外观.	MA	
			2、There must be no extensible rips 不能有可延伸性裂纹.	MA	
Silicone 硅胶	Silicone coating 硅胶涂布	Full size 全尺寸	1、The height cannot exceed the LCD CF surface / 高度不能超过 LCD CF 面.		MI
			2、No overflow and lack of glue / 不能溢胶和缺胶.		MI
			3、Silicone cannot cover POL and FPC/ 硅胶不能覆盖到 POL 和 FPC.		MI

Material 检验区域	Inspection items 检验项目	Product size 适用尺寸	Inspection standards 检验规格	Category 缺陷类别	
PCBA FPC Connector 连接器	Appearance 表面外观	Full size 全尺寸	1.FPC is not allowed to have drape/bubble/fold / 不允许有披锋/气泡/褶皱.		MI
			2.Surface scratches do not allow copper leakage / 表面划伤不允许出现漏铜.	MA	
			3.Cracking is not allowed / 不允许破裂.	MA	
			4.Gold finger oxidation is not allowed 不允许金手指氧化.	MA	
			5.Chromatic aberration is not allowed 不允许出现色差.	MA	
	Components 元器件	Full size 全尺寸	1. Damage, missing parts, and incorrect models are not allowed 不允许损伤、缺件、型号错误.	MA	
			2.Components need to be insulated with high temperature adhesive (unless not required by the drawings) / 元器件需要有高温胶绝缘保护（除非图纸无要求）.		MI
	Weld 焊接	Full size 全尺寸	1. False soldering, virtual soldering, and tinning are not allowed 不允许假焊、虚焊、连锡.	MA	
			2. No solder bead residue is allowed 不允许有锡珠残留.		MI
			3.The pads need to be glued with high temperature (unless not required by the drawings) / 焊盘需贴高温胶（除非图纸无要求）.		MI
POL 偏光片	Scratches 划伤	Under 6 inches 6 寸以下	1.W≤0.05mm；L≤5mm，Ignore（忽略）. 2.0.05mm＜W≤0.10mm ; L≤5mm ; N≤2; DS≥10mm. 3.0.10mm＜W；5mm＜L，Not allowable（不允许）.		MI
		6~10.0 inches 6 寸~10.0 寸	1.W≤0.07mm；L≤5mm，Ignore（忽略）. 2.0.07mm＜W≤0.12mm ; L≤10mm ; N≤3 ; DS≥10mm. 3.0.12mm＜W；10mm＜L，Not allowable（不允许）.		MI
		More than 10 inches 10 寸以上	1.W≤0.10mm；L≤5mm，Ignore（忽略）. 2.0.10mm＜W≤0.15mm ; L≤10mm ; N≤4 ; DS≥10mm. 3.0.15mm＜W；10mm＜L，Not allowable（不允许）.		MI

Material 检验区域	Inspection items 检验项目	Product size 适用尺寸	Inspection standards 检验规格	Category 缺陷类别	
POL 偏光片	Bubbles	Under 6 inches 6 寸以下	1.D≤0.15mm，Ignore（忽略）. 2.0.15mm＜D≤0.30mm；N≤2；DS≥10mm. 3.D＞0.30mm，Not allowable（不允许）.		MI
		More than 6 inches 6 寸以上	1.D≤0.20mm，Ignore（忽略）. 2.0.20mm＜D≤0.40mm；N≤3；DS≥10mm. 3.D＞0.40mm，Not allowable（不允许）.		MI
	Bubbles around the edges 边缘气泡	Full size 全尺寸	1.Within 1/2BM of the display area, it is not allowed 显示区往外 1/2BM 区域内，不允许. 2.The display area is 1/2 outside the BM area, and it is not controlled 显示区往外 1/2BM 区域以外，不管控.		MI
	Point defects Embossing	Under 6 inches 6 寸以下	1.D≤0.15mm，Ignore（忽略）. 2.0.15mm＜D≤0.30mm；N≤2；DS≥10mm. 3.D＞0.30mm，Not allowable（不允许）.		MI
		6~10.0 inches 6 寸~10.0 寸	1.D≤0.20mm，Ignore（忽略）. 2.0.20mm＜D≤0.40mm；N≤3；DS≥10mm. 3.D＞0.40mm，Not allowable（不允许）.		MI
		More than 10 inches 10 寸以上	1.D≤0.25mm，Ignore（忽略）. 2.0.25mm＜D≤0.50mm；N≤4；DS≥10mm. 3.D＞0.50mm，Not allowable（不允许）.		MI
	Dirty 脏污	Full size 全尺寸	Dirt, finger prints, etc. are not allowed 不允许有脏污、手指印等.		MI
	Warping 起翘	Full size 全尺寸	Not allowed 不允许.		MI
	Paste offset 贴附偏位	Full size 全尺寸	It is not allowed to exceed the patch tolerance required by the drawing; After TP lamination, it is not allowed to leak the edges of the polarizer 不允许超出图纸要求的贴片公差；在 TP 贴合后不允许漏偏光片边缘.		MI
	Angle mistake 角度错误	Full size 全尺寸	Not allowed 不允许.	MA	
	Mixture 混料	Full size 全尺寸	Not allowed 不允许.	MA	

Material 检验区域	Inspection items 检验项目	Product size 适用尺寸	Inspection standards 检验规格	Category 缺陷类别	
TP	Scratches 划伤	Under 6 inches 6 寸以下	1.W≤0.05mm；L≤5mm，Ignore（忽略）. 2.0.05mm＜W≤0.10mm；L≤5mm；N≤2；DS≥10mm. 3.0.10mm＜W；5mm＜L，Not allowable（不允许）. 4.There is a feeling scratch，Not allowable 有感划伤，不允许.		MI
		6~10.0 inches 6 寸~10.0 寸	1.W≤0.07mm；L≤5mm，Ignore（忽略）. 2.0.07mm＜W≤0.12mm；L≤10mm；N≤3；DS≥10mm. 3.0.12mm＜W；10mm＜L，Not allowable（不允许）. 4.There is a feeling scratch，Not allowable 有感划伤，不允许.		MI
		More than 10 inches 10 寸以上	1.W≤0.10mm；L≤5mm，Ignore（忽略）. 2.0.10mm＜W≤0.15mm；L≤10mm；N≤4；DS≥10mm. 3.0.15mm＜W；10mm＜L，Not allowable（不允许）. 4.There is a feeling scratch，Not allowable 有感划伤，不允许.		MI
	Black dots white dots 黑点/白点	Under 6 inches 6 寸以下	1.D≤0.15mm，Ignore（忽略）. 2.0.15mm＜D≤0.30mm；N≤2；DS≥10mm. 3.D＞0.30mm，Not allowable（不允许）.		MI
		6~10.0 inches 6 寸~10.0 寸	1.D≤0.20mm，Ignore（忽略）. 2.0.20mm＜D≤0.40mm；N≤3；DS≥10mm. 3.D＞0.40mm，Not allowable（不允许）.		MI
		More than 10 inches 10 寸以上	1.D≤0.25mm，Ignore（忽略）. 2.0.25mm＜D≤0.50mm；N≤4；DS≥10mm. 3.D＞0.50mm，Not allowable（不允许）.		MI
	OCA Bubbles 气泡	Full size 全尺寸	Not allowed 不允许.		MI
	Corners broken 崩边/崩角	Full size 全尺寸	1.Product front /产品正面：Edge and corner chipping is not allowed / 崩角、崩边不允许 2.Product back /产品背面: X≤ 0.5 , Y≤0.5，Z≤1/2T；N≤4；DS≥10mm.	MA	
	Silk screen 丝印	Full size 全尺寸	The silk screen is clear, complete and correct 丝印清晰、完整、内容正确.		MI

Material 检验区域	Inspection items 检验项目	Product size 适用尺寸	Inspection standards 检验规格	Category 缺陷类别	
TP	Dirty 脏污	Full size 全尺寸	Uncleanable dirt，Not allowable. 不可擦拭的脏污，不允许.		MI
	Broken 破损	Full size 全尺寸	Not allowable. 不允许.		MI
	Ink color aberration 油墨色差	Full size 全尺寸	ΔE>1，Not allowable（不允许）.		MI
	Cover pinholes 针孔	Full size 全尺寸	1.D≤0.20mm , N≤2 , DS≥10mm，allowable 2.D > 0.20mm，intensive pinholes（密集型针孔），Not allowable（不允许）.		MI
	Paint off 掉漆	Full size 全尺寸	Touch-up on the back of the cover is allowed, and the touch-up area cannot exceed 2.0mm in diameter / 允许在盖板背面补漆，补漆面积不能超过直径 2.0mm.		MI
BL 背光	Backlight separation 背光分离	Full size 全尺寸	Not allowable 不允许.		MI
	Deformed 变形	Full size 全尺寸	Measured using a plug gauge，If the deformation exceeds 0.3mm, NG is judged 使用塞规测量，形变超过 0.3mm，判定 NG.		MI
	Iron frame Oxidation /abscission 铁框氧化/脱落	Full size 全尺寸	Not allowable 不允许.		MI
	Dirt/adhesive residue/solder beads 脏污/残胶/锡珠	Full size 全尺寸	Not allowable 不允许.		MI
	Inkjet/barcode/ QR code 喷码/条码/二维码	Full size 全尺寸	The inkjet code is clear and complete, the barcode and QR code can be scanned normally, and the content and format meet the requirement / 喷码清晰完整、条码和二维码可正常扫描，内容和格式与要求相符.		MI
	Auxiliary materials 辅料	Full size 全尺寸	Accessories (vinyl, double-sided tape, insulating glue, etc.) are not allowed to be missed, misguided, defective, etc 辅料（黑胶、双面胶、绝缘胶等）不允许有漏贴、贴偏、残缺等.		MI

4.3、Functional inspection standards:

(D : diameter, W : width, L : length, N : quantity, DS : spacing)

Material 检验区域	Inspection items 检验项目	Product size 适用尺寸	Inspection standards 检验规格	Category 缺陷类别	
Display Screen 模组	Light leakage / Mura 漏光/ Mura	Full size 全尺寸	1.Use ND5% filter masking, visual invisibility is OK 使用 ND5%遮盖，目视不可见即为 OK. 2.If necessary, sign off on the sample 必要时，签限定样.		MI
	Brightness uniformity 亮度均匀性	Full size 全尺寸	Brightness uniformity < 75.0%，Not allowable 亮度均匀性 < 75.0%，不允许.	MA	
	LCD bright spots/dark spots 玻璃亮点/暗点	Under 6 inches 6 寸以下	1.D≤0.10mm，Ignore（忽略）. 2.0.10mm < D≤0.20mm；N≤2；DS≥10mm. 3.D > 0.20mm，Not allowable（不允许）.		MI
		6~10.0 inches 6 寸~10.0 寸	1.D≤0.15mm，Ignore（忽略）. 2.0.15mm < D≤0.30mm；N≤3；DS≥10mm. 3.D > 0.30mm，Not allowable（不允许）.		MI
		More than 10 inches 10 寸以上	1.D≤0.20mm，Ignore（忽略）. 2.0.20mm < D≤0.40mm；N≤4；DS≥10mm. 3.D > 0.40mm，Not allowable（不允许）.		MI
	Backlight black dots/white dots 背光黑点/白点	Under 6 inches 6 寸以下	1.D≤0.15mm，Ignore（忽略）. 2.0.15mm < D≤0.30mm；N≤2；DS≥10mm. 3.D > 0.30mm，Not allowable（不允许）.		MI
		6~10.0 inches 6 寸~10.0 寸	1.D≤0.20mm，Ignore（忽略）. 2.0.20mm < D≤0.40mm；N≤3；DS≥10mm. 3.D > 0.40mm，Not allowable（不允许）.		MI
		More than 10 inches 10 寸以上	1.D≤0.25mm，Ignore（忽略）. 2.0.25mm < D≤0.50mm；N≤4；DS≥10mm. 3.D > 0.50mm，Not allowable（不允许）.		MI
	Linear foreign bodies 线状异物	Under 6 inches 6 寸以下	1.W≤0.05mm；L≤5mm，Ignore（忽略）. 2.0.05mm < W≤0.10mm ; L≤5mm ; N≤2; DS≥10mm. 3.0.10mm < W；5mm < L，Not allowable（不允许）.		MI
		6~10.0 inches 6 寸~10.0 寸	1.W≤0.07mm；L≤5mm，Ignore（忽略）. 2.0.07mm < W≤0.12mm ; L≤10mm ; N≤3 ; DS ≥10mm. 3.0.12mm < W；10mm < L，Not allowable（不允许）.		MI
		More than 10 inches 10 寸以上	1.W≤0.10mm；L≤5mm，Ignore（忽略）. 2.0.10mm<W≤0.15mm ; L≤10mm ; N≤4 ; DS ≥10mm. 3.0.15mm < W；10mm < L, Not allowable（不允许）.		MI

Material 检验区域	Inspection items 检验项目	Product size 适用尺寸	Inspection standards 检验规格	Category 缺陷类别	
Display Screen 模组	White/Black print 白印/黑印	Full size 全尺寸	Use ND5% filter masking, visual invisibility is OK 使用 ND5%遮盖，目视不可见即为 OK.		MI
	Interference pattern/Newton pattern 干涉纹/牛顿纹	Full size 全尺寸	Not allowable 不允许.		MI
	Membranes displacement 膜材移位	Full size 全尺寸	Not allowable 不允许.		MI
	Color blocks 色斑	Full size 全尺寸	Use ND5% filter masking, visual invisibility is OK /使用 ND5%遮盖，目视不可见即为 OK.		MI
	Display abnormal 画异	Full size 全尺寸	Not allowable 不允许.	MA	
	No display 无显示	Full size 全尺寸	Not allowable 不允许.	MA	
	Line/Missing Drawing 线条/缺画	Full size 全尺寸	Not allowable 不允许.	MA	
	Splash screen 闪屏	Full size 全尺寸	Not allowable 不允许.	MA	
	LCD grid LCD 网格	Full size 全尺寸	Not allowable 不允许.	MA	
	Afterimage 残影	Full size 全尺寸	Not allowable 不允许.	MA	
	Wrong viewing angle 可视角错误	Full size 全尺寸	Not allowable 不允许.	MA	
TP	No touch 无触摸	Full size 全尺寸	Not allowable 不允许.	MA	
	Touch the jump point 触摸跳点	Full size 全尺寸	Not allowable 不允许.	MA	
	Touch not sensitive 触摸不灵敏	Full size 全尺寸	Not allowable 不允许.	MA	