Request information

PRODUCT SPECIFICATION

TFT-LCD MODULE

Module No: 312258-01

☑ Preliminary Specification

☐ Approval Specification

Designed by	Checked by	Approved by

Final Approval by Customer

Approved by	Comment

For more information, contact us:

WWW.DCLTEK.COM | 1-800-407-8917 | SALES@DCLTEK.COM

※The specification of “TBD” should refer to the measured value of sample . If there is difference between the design specification and measured value, we naturally shall negotiate and agree to solution with customer.

This document contains confidential and proprietary information of DCL Technologies, Inc. It is provided solely for the recipient's evaluation and may not be reproduced, disclosed, or distributed, in whole or in part, without the prior written consent of DCL Technologies, Inc.

1.Document Revision History

Version	Contents	Date	Note
V0	Original	2021.11.18	
V1	Color according to customer requirements	2022.2.18	

2. General Description

N0	Item	Specification	Unit	Remark
1	LCD Size	TFT"4.3	inch	-
2	Panel Type	IPS	-	-
3	Number of pixels	800 x RGB x 480	pixel	-
4	Display mode	Normally Black	-	-
5	Display colors	16.7M	-	-
6	Viewing Direction	ALL	-	-
7	Module Size	105.50(W) x67.20(L) x2.90(T)	mm	Note
8	Panel Active Area	95.04 (W) x 53.86 (L)	mm	Note
9	Pixel Pitch	0.108(H) × 0.108(V)	mm	-
10	Interface	RGB	-	-

3. Outline Dimension

This document contains confidential and proprietary information of DCL Technologies, Inc. It is provided solely for the recipient's evaluation and may not be reproduced, disclosed, or distributed, in whole or in part, without the prior written consent of DCL Technologies, Inc.

Front View

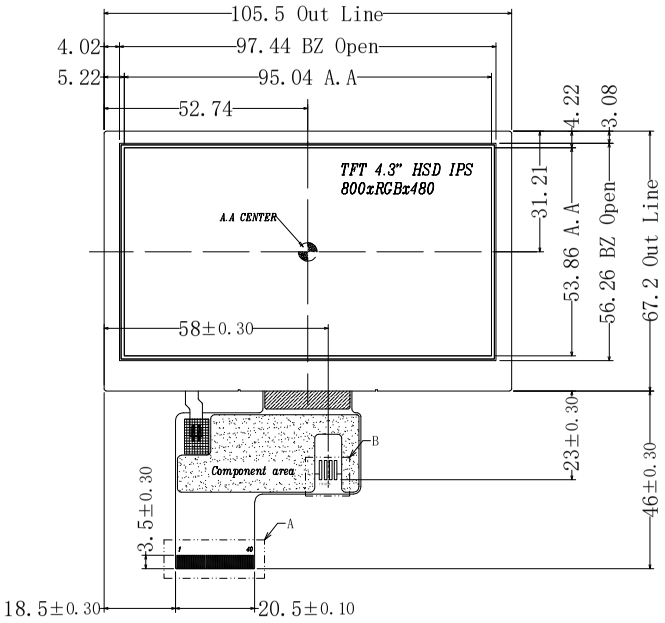

Side View

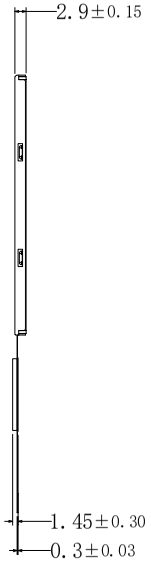

Back View

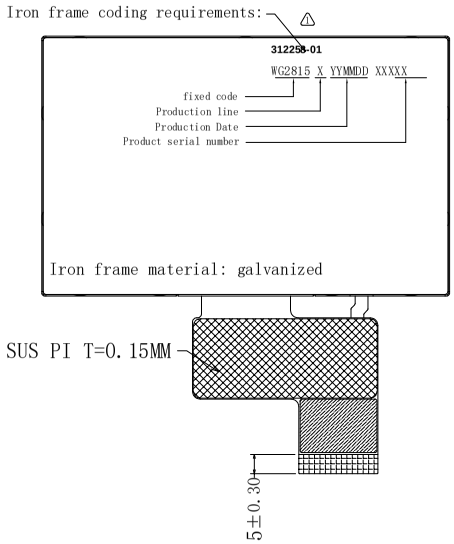

Display Pin interface

1	LEDK
2	LEDA
3	GND
4	VCC
5-12	R0-R7
13-20	G0-G7
21-28	B0-B7
29	GND
30	CLK
31	DISP
32	HSYNC
33	VSYNC
34	DEN
35	NC
36	GND
37	XR
38	YD
39	XL
40	YU

Notes:
1. Display : 4.3″, HSD TFT
2. Resolution: 800xRGBx480
3. LCD Viewing Direction: ALL,
4. Display Mode: Normally Black
5. LCD Driver: Source IC:EK9716
6. LCM Brightness: 800cd/m²(TYP),uniformity≥80%
7. Unmarked tolerance:±0.2
8. OPERATING TEMP: -10° C~ +60° C
9. STORAGE TEMP: -20° C~ +70° C
10. Requirements on Environmental Protection: ROHS

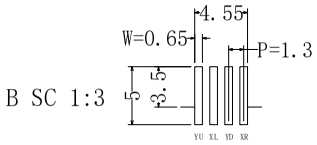

B SC 1:3

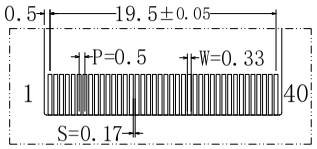

A SC 1:3

CURRENT IF=40mA
8c*2b=16LED

DCLTEK

REV	DESCRIPTION	DATE	NAME
3			
2			
1	Color according to customer requirements	2022.2.14	
0	NEW	2021.11.1	

SCALE:1/1	UNIT:mm	PAGE:1/1		Approve	Check	Drawn
Part No:	312258-01		VER:V1			
Customer No:						

4. Interface Specification

NO.	Symbol	Function	Remark
1	LEDK	Backlight LED Cathode	
2	LEDA	Backlight LED anode	
3	GND	System Ground	
4	VCC	Power supply for logic operation	
5~12	R0~R7	Data bus	
13~20	G0~G7	Data bus	
21~28	B0~B7	Data bus	
29	GND	System Ground	
30	CLK	Pixel clock signal	
31	DISP	Display on/off control	
32	HSYNC	Horizontal Sync signal	
33	VSYNC	Vertical Sync signal	
34	DEN	Data Enable	
35	NC	NC	
36	GND	System Ground	
37	XR	Touch Panel Control Pin	
38	YD	Touch Panel Control Pin	
39	XL	Touch Panel Control Pin	
40	YU	Touch Panel Control Pin	

5. Absolute Maximum Ratings

5.1 Electrical Absolute Rating

Item	Symbol	Min.	Max.	Unit	Note
Power supply voltage	DV_{DD}	-0.3	5	V	GND=0
Logic Signal Input Level	V_I	-0.3	DV_{DD} +0.3	V	

Note (1) Stresses above those listed under "Absolute Maximum Rating" may cause permanent damage to the device.

These are stress ratings only. Functional operation of this device at indicated in the operational sections(6.1) of this specification.

6.LED Backlight Specification

Item	Symbol	Min	Typ	Max	Unit	Test Condition	Note
LED Current	IF	-	40	–	mA	-	-
LED Voltage	VF	-	25.4	–	V	IF=40mA	-
LCM Luminance	LV	-	800		cd/m2	IF=40mA	-
Life Time			25000	–	Hr.	IF 40mA	-
Color	WHITE						

Note (1) Permanent damage may occur to the LCD module if beyond this specification. Functional operation

should be restricted to the conditions described under normal operating conditions.

(2)Ta=25±2℃

(3)Test condition: LED Current 40mA

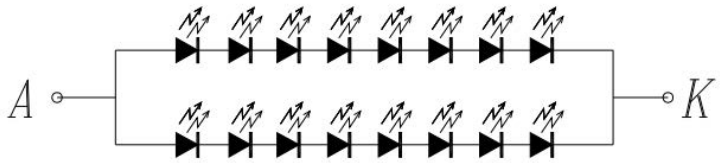

CURRENT IF=40mA
8c*2b=16LED

7.Optical Specification

Item	Symbol	Condition	Min	Typ	Max	Unit	Remark
Response time	Tr+Tf	Θ=0O Ø=0o Ta=25˚C	-	30	-	ms	
Contrast ratio	Cr		640	800			
Color gamut	S（%）		-	-		%	
Luminance uniformity	WHITE		80			%	
Viewing angle range	Θx+	CR≧10 Ta=25˚C	70	80		deg	
	Θx-		70	80		deg	
	Θy+		70	70		deg	
	Θy-		70	80		deg	
LCM Luminance	LV	Θ=0o Ø=0o Ta=25˚C	-	800	-		
CIE(X,Y)Chromaticity	White(X)		0.285	0.325	0.365		
	White(Y)		0.305	0.345	0.385		

7.1 Measuring Condition

- Measuring surrounding : dark room
- Ambient temperature : 25±2℃
- 30min. warm-up time.

7.2 Measuring Equipment

- TOPCON BM-7
- Measuring spot size : field 2°

Note (1) Definition of Vsat and Vth (at 20℃)

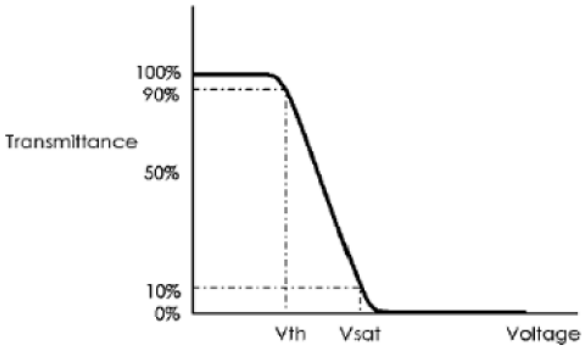

Note (2) Definition of Viewing Angle :

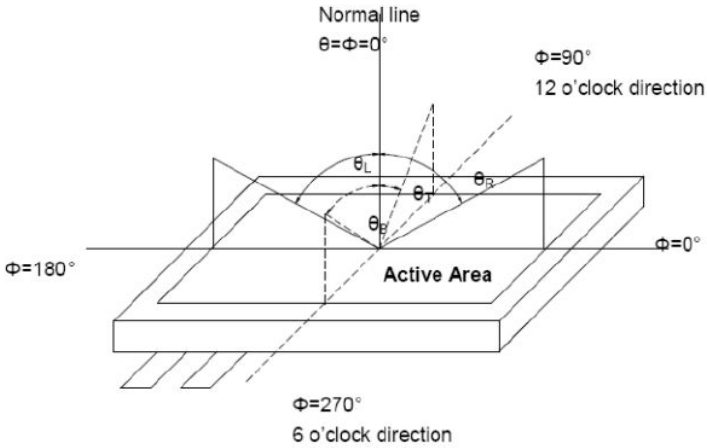

Note 3: Definition of response time:

The response time is defined as the LCD optical switching time interval between “White” state and “Black” state. Rise time (TON) is the time between photo detector output intensity changed from 90% to 10%. And fall time (TOFF) is the time between photo detector output intensity changed from 10% to 90%.

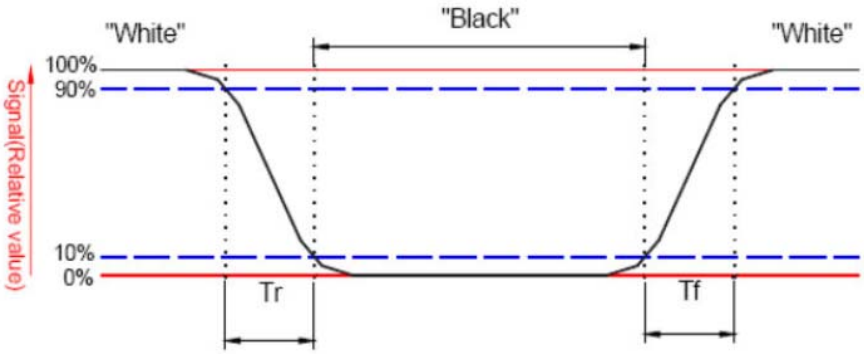

Note 4: Definition of contrast ratio:

Contrast ratio is calculated by the following formula.

$$\text{Contrast ratio (CR)} = \frac{\text{Brightness on the "white" state}}{\text{Brightness on the "black" state}}$$

Note 5: Definition of color chromaticity (CIE 1931)

Note 6: All input terminals LCD panel must be ground while measuring the center area of the panel.

7.3 Block Diagram

TFT-LCD Module

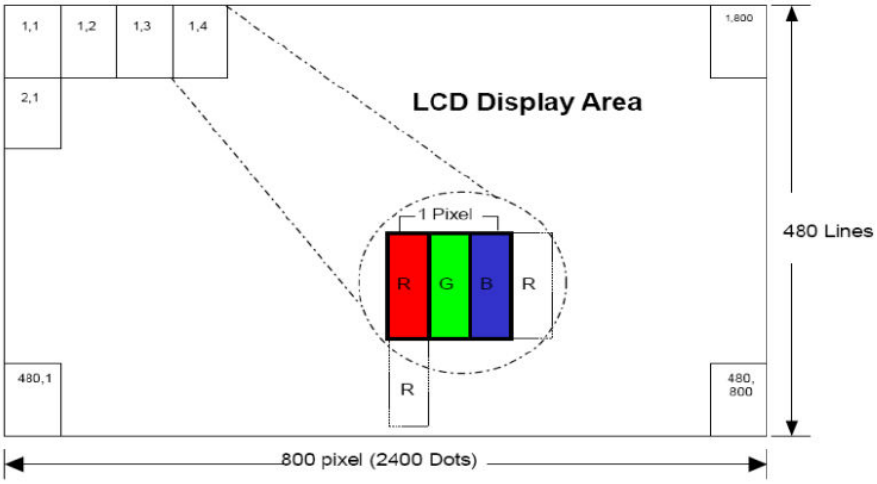

8. Electrical Characteristics

Item	Symbol	Min.	Typ.	Max.	Unit	Note
Supply Voltage	DVDD	3.0	3.3	3.6	V	

8.1 TFT-LCD Power on/off Timing Sequence

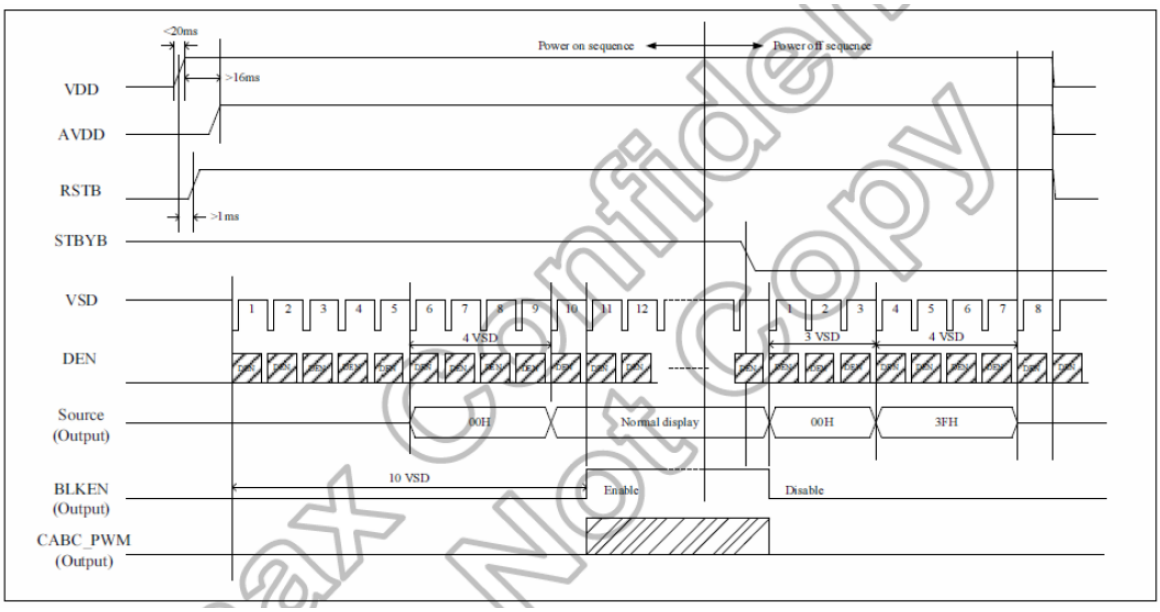

Max Confidential Not Copy

8.2 Timing Diagram of Interface Signal

AC Electrical Characteristics

Parameter	Symbol	Spec.			Unit
		Min.	Typ.	Max.	
HS setup time	T_{hst}	8	-	-	ns
HS hold time	T_{hhd}	8	-	-	ns
VS setup time	T_{vst}	8	-	-	ns
VS hold time	T_{vhd}	8	-	-	ns
Data setup time	T_{dsu}	8	-	-	ns
Data hold time	T_{dhd}	8	-	-	ns
DE setup time	T_{esu}	8	-	-	ns
DE hold time	T_{ehd}	8	-	-	ns
VDD Power On Slew rate	T_{POR}	-	-	20	ms
RSTB pulse width	T_{Rst}	10	-	-	us
CLKIN cycle time	T_{cph}	20	-	-	ns
CLKIN pulse duty	T_{cwh}	40	50	60	%
Output stable time	T_{sst}	-	-	6	us

8.3Data Input format

- **Horizontal timing**

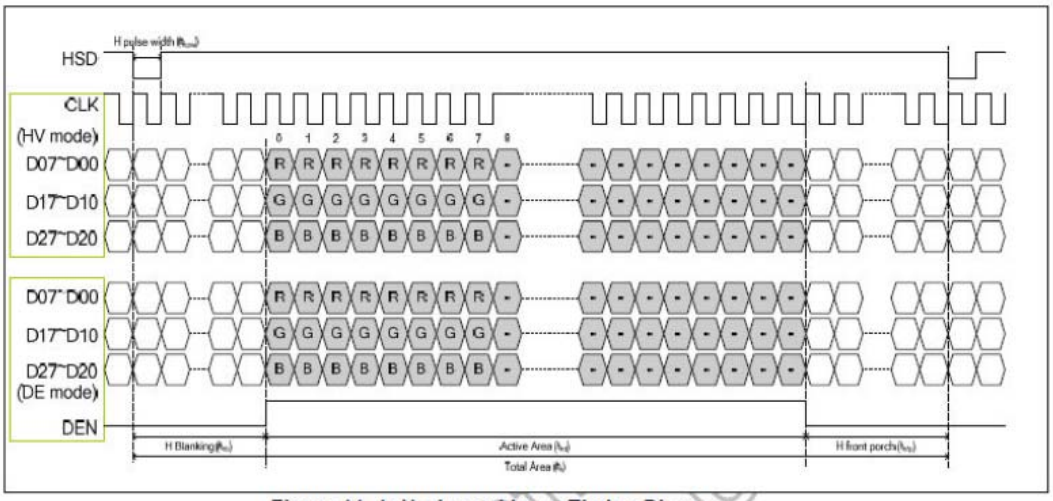

Figure 11. 1: Horizontal Input Timing Diagram

- **Vertical timing**

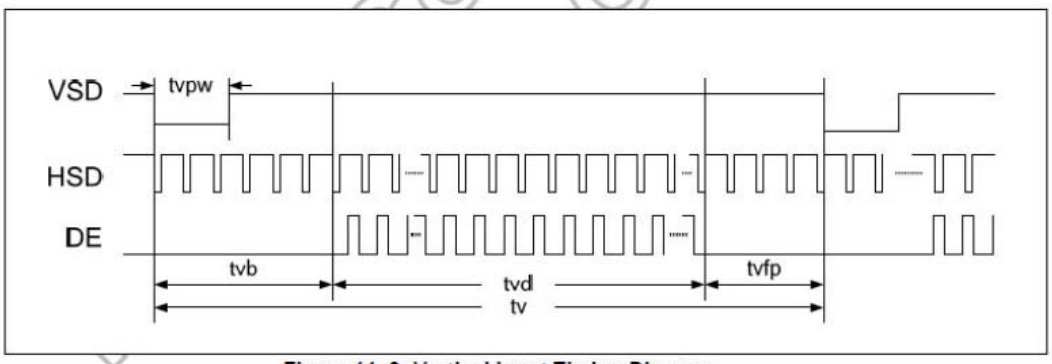

Figure 11. 2: Vertical Input Timing Diagram

8.4 Timing

- **Horizontal timing**

Parameter	Symbol	Spec.			Unit
		Min.	Typ.	Max.	
Horizontal Display Area	thd		800		DCLK
DCLK frequency	fclk	-	30	50	MHz
One Horizontal Line	th	889	928	1143	DCLK
HS pulse width	thpw	1	48	255	DCLK
HS Back Porch (Blanking)	thb		88		DCLK
HS Front Porch	thfp	1	40	255	DCLK
DE mode Blanking	th-thd	85	128	512	DCLK

- **Vertical timing**

Parameter	Symbol	Spec.			Unit
		Min.	Typ.	Max.	
Vertical Display Area	tvd		480		T_H
VS period time	tv	513	525	767	T_H
VS pulse width	tvpw	3	3	255	T_H
VS Back Porch (Blanking)	tvb		32		T_H
VS Front Porch	tvfp	1	13	255	T_H
DE mode Blanking	tv-tvd	4	45	255	T_H

Confidential Copy

9.Reliability Test Items

Item	Test Condition	Criterion
High Temperature Operation	+60 ℃, 48 hrs	Note1，Note2
High Temperature Operation	-10 ℃, 48 hrs	
High Temperature Storage	-70 ℃, 48 hrs	
Low Temperature Storage	-20 ℃, 48 hrs	
High Temp. & High Humidity Storage	40 ℃, 90％ RH, 48hrs	
Thermal Shock (Static)	-20℃, 30 min /60℃, 30 min, 100 cycles	

Note1:Evaluation should be tested after storage at room temperature for two hours.

Note2:

Pass: Normal display image no line defect.

Fail: No display image, or line defects.

Partial transformation of the module parts should be ignored.

10.Precautions

Please pay attentions to the followings as using the LCD module.

Handling

(a) Do not apply strong mechanical stress like drop, shock or any force to LCD module. It may cause improper operation, even damage.

(b) Because the polarizer is very fragile and easy to be damaged, do not hit, press or rub the display s urface with hard materials.

(c) Do not put heavy or hard material on the display surface, and do not stack LCD modules.

(d) If the display surface is dirty, please wipe the surface softly with cotton swab or clean cloth.

(e) Avoid using Ketone type materials (e.g. Acetone), Toluene, Ethyl acid or Methyl chloride to clean t he display surface. It might damage the touch panel surface permanently. The recommended solvents are water and Isopropyl alcohol.

(f) Wipe off water droplets or oil immediately.

(g) Protect the LCD module from ESD. It will damage the LSI and the electronic circuit.

(h) Do not touch the output pins directly with bare hands.

(i) Do not disassemble the LCD module.

(j) Do not lift the FPC of Touch Panel.

Storage

(a) Do not leave the LCD modules in high temperature, especially in high humidity for a long time.

(b) Do not expose the LCD modules to sunlight directly.

(c) The liquid crystal is deteriorated by ultraviolet. Do not leave it in strong ultraviolet ray for a long time.

(d) Avoid condensation of water. It may cause improper operation.

(e) Please stack only up to the number stated on carton box for storage and transportation. Excessive w eight will cause deformation and damage of carton box.

Operation (a) When mounting or dismounting the LCD modules, turn the power off.

(b) Protect the LCD modules from electric shock.

(c) The Driver IC control algorithms stated above should always obeyed to avoid damaging the LSI an d electronic circuit.

(d) Be careful to avoid mixing up the polarity of power supply for backlight.

(e) Absolute maximum rating specified above has to be always kept in any case. Exceeding it may cau se non-recoverable damage of electronic components or, nevertheless, burning.

(f) When a static image is displayed for a long time, remnant image is likely to occur.

(g) Be sure to avoid bending the FPC to an acute shape, it might break FPC.

(h) Most of the touch screens have air vent to equalize the inside air pressure to the outside one. The air vent must be open and liquid contact must be avoided as the liquid may be absorbed if the liq uid is accumulated near the air vent.

(i) For the fragility of ITO film, it should avoid to use too tapering pen as the input material.

Touch Panel Mounting Notes

(a) If a cushion is used between bezel/housing and film must be choose as free as enough to absorb t he expansion and contraction to avoid the distortion of film.

(b) The cushion must be placed out of the Viewing Area.

(c) Bezel/Housing edge must be posited between Key Area and Viewing Area. The edge enters the Ke y Area may cause unexpected input if the gap is too narrow or foreign particles like dusts exist be tween Bezel/Housing and ITO film.

(d) Mounting example:

The corner part has conductivity. Do not touch any metal part after mounting.

Others

a) If the liquid crystal leaks from the panel, it should be kept away from the eyes or mouth.

b) For the fragility of polarizer, it is recommended to attach a transparent protective plate over the di splay surface.

c) It is recommended to peel off the protection film on the polarizer slowly so that the electrostatic c harge can be minimized

11.HSF Requirements

☑ RoHS(Restriction of the use of certain Hazardous Substances)

☐HF (Halogen Free)

☐REACH (Regulation the Registration, Evaluaton, Authorization and Restricton of Chemicals)

☐ Other regulations

12.Packaging diagram

TBD

DCLTEK

深圳市丽台电子有限公司

Quality Inspection Standards

品质允收标准

Model No. / 产品型号: **Applies 0.95~5.0 Inch Touch Display Screen**
Updated Date /生效日期: **2022-05-20**
Version / 版 本: **A0**
Customer confirmation : _____

Record of Revision /修订履历

Version /版本	Revision Record /修订内容	Reviser /修订人	Revision Date /修订日期
V0	首发 / Starting		2022.05.20

1.Scope of application /适用范围.

This document shall be applied to 0.95~5.0 inch touch display screen.

本文件适用于0.95~5.0 寸触摸显示屏.

2.Inspection conditions and environment /检验条件与环境.

2. 1 Inspection Conditions /检验条件:

(1) Inspection Distance /检测距离: 35cm ±5cm.

(2) Check time /检验时间：

Displays performance test /功能测试：2~3S /Image，Cosmetic Inspection /外观检验:10~12S.

(3) Check the viewing angle /检验视角:

Light-on Inspection Angle /点灯检验角度： ±45°.

Cosmetic Inspection Angle /外观检验角度：±45°.

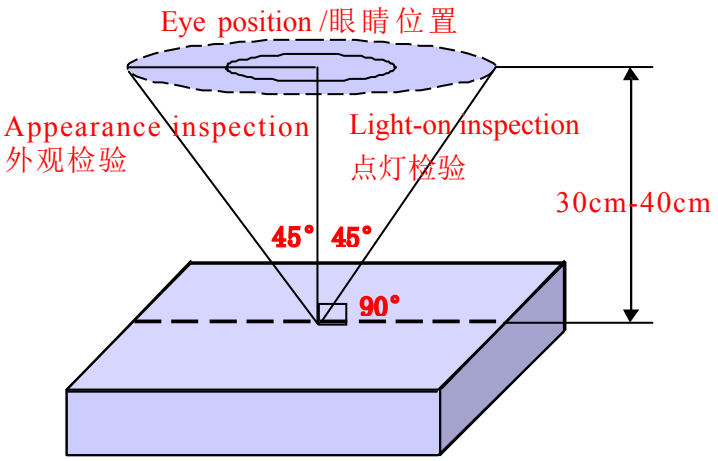

(Perpendicular to LCD panel surface /垂直于LCD表面)

2.2 Inspection environment /检验环境:

Ambient Temperature 温度		25℃±5℃
Ambient Humidity 湿度		55±5%RH
Ambient Illumination 亮度	Cosmetic Inspection 外观检验	800-1000 Lux
	Functional Inspection 点灯检验	200~300Lux

2.3 Sampling Conditions /抽样条件:

（1）Quantity to be inspected /批量：Quantity of shipment lot per model /单次运送单一型号数量.

（2）Sampling method /抽样方法：

Sampling Plan /抽样计划		GB/T 2828.1- 2003
		Normal Inspection ， Single Sampling 正常检验、单次抽样
		General inspection level： Ⅱ 一般检验水平：二级
AQL	Major Defect /主要缺陷	0.65
	Minor Defect /次要缺陷	1.0

（3）The classification of Major(MA) and Minor(MI) defects is shown as “3.1 Classification of defects”.

主缺（MA）及次缺（MI）定义于”3.1缺陷分类”.

3.Terms And Definitions /术语和定义

3.1 Classification of defects / 缺陷分类 :

（1）Major defects /主要缺陷:

A major defect is a defect that is likely to result in failure, or to reduce materially the usability of the product for its intended purpose .

可导致产品功能失效或减少产品可用性的缺陷.

（2）Minor defects /次要缺陷:

It will not cause the product to fail and reduce the defects in the effective use and operation of the product.

不会导致产品功能失效和减少产品的有效使用与操作的缺陷.

3.2 Point defects /点状缺陷：

The size of the point defect is defined by the diameter D, and the average diameter of the defect is D=1/2（W+L）.

点状缺陷的大小是由直径 D 定义的，缺陷的平均直径 D=1/2(W+L).

3.3 Linear defects /线状缺陷：

When defect size L≥2W,the defect count as liner type defect.Size of linear defect is defined by length (L) and the maximum width (W).

当缺陷尺寸 L≥2W 时，被视为线状缺陷，线状缺陷是由长度 (L) 和最大宽度 (W) 定义的.

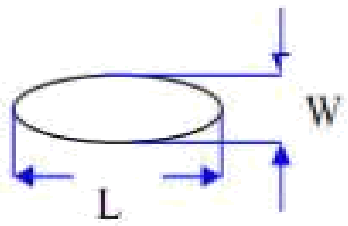

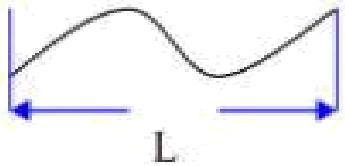

3.4 LCD sub-pixel dot /LCD子像素点

（1）Definition /定义：The point defect area is greater than 50% of the LCD sub-pixel area, and is visible through ND5% filter masking .

子像素点缺陷面积大于 50% LCD子像素面积, 且透过 ND5%遮盖是可见的.

（2）The drawing of 1/2 area sub-pixel definition / 1/2 面积的子像素定义绘图:

The 1/2 area sub-pixel can be defined as below one or more of specific shapes

1/2 面积的子像素可以定义为如下一个或多个特定形状图：

3.5 Small bright dot /细碎亮点：

Point defects smaller than "LCD sub-pixels" /小于“LCD子像素点”的点缺陷.

（Ratio of Zone I to Zone O /I 区与 O 区比例：1：2：1）

3.6 ND filter inspection method /ND卡的检验方法：

Hold the ND filter about 5cm above the display area, with your eyes 30-40cm away from the panel, and observe for 2~3 seconds.

在显示区域上方大约 5cm 处握住 ND 卡，眼睛距离面板 30-40cm，观察2~3 秒.

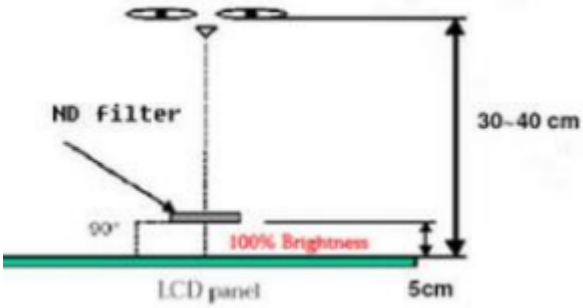

3.7 Any FPC surface problems that do not leak copper on the surface and do not cause functional failure are acceptable.
任何 FPC 表面问题，表面未露铜和不造成功能失效是可以接受的.

3.8 Extraneous substances that can be wiped out，like Finger point,Particles are not considered as a defect .
可以被擦拭干净的表面物质不视为缺陷 (如手指印，尘粒) .

3.9 Defects that are covered by the material and are not visible to the eye and do not affect the function and use are not considered defects.

会被物料覆盖目视不可见，且不影响功能与使用的缺陷不视为缺陷.

3.10 Panel damage /面板损伤：

Glass damage outside the AA display area that does not affect the effective wiring is acceptable.

AA 显示区域以外的玻璃损伤，不影响有效线路是可以接受的.

3.11 Issues not specified or defined in this acceptance standard shall be handled through friendly negotiation between the two parties.

本允收标准中未规定或定义的问题，双方友好协商处理.

4. Inspection standards /检验标准

4.1 Structural Dimensions /结构尺寸规格

Serial Number 序号	Measurement items /测量项目		Specification /规格	Remark /备注
	名称 /Name	Unit /单位	Tolerance /公差	
1	Outside dimension：Length 尺寸：长	mm /毫米	0.10mm~0.20mm	Please refer to the product specification for detailed dimensions and tolerances 详细的尺寸规格和公差请参考产品规格书
2	Outside dimension：Width 尺寸：宽	mm /毫米	0.10mm~0.2mm	
3	Outside dimension：Thickness 尺寸：厚	mm /毫米	0.20mm~0.30mm	

4.2 Appearance Inspection Specification /外观检验规格

(D： diameter, W： width, L： length, N： quantity, DS： spacing)

Inspection area 检验区域	Inspection items 检验项目	Inspection specifications 检验规格	Defect category 缺陷类别	
Glass 玻璃	Wire(on Array) 线路	Can't be damaged 不能损伤	MA	
	Chipping/corner breaking 崩边/破角	Can't affect the effective lines and functions 不能影响有效线路和功能	MA	
	Edge 边缘	There must be no extensional cracks 不可有延伸性裂纹	MA	
Silicone 硅胶	Silicone coating 硅胶涂布	The height must not exceed the LCD CF surface 高度不能超过LCD CF面		MI
	Glue overflow 溢胶	Can't cover FPC, POL, etc 不能覆盖到FPC、POL等		MI

Inspection area 检验区域	Inspection items 检验项目	Inspection specifications 检验规格	Defect category 缺陷类别	
PCBA FPC Connector 连接器	Appearance 外观	Scratches or injuries are not allowed to cause copper exposure 划伤或损伤不允许表面出现露铜		MI
	Component 元器件	Can't be damaged and lack 不能损伤和缺少	MA	
	Gold finger oxidation 金手指氧化	Not allowed 不允许		MI
	Connection status 连接状况	The connection must be accurate and stable 必须准确稳定连接	MA	
	Break 破裂	Not allowed 不允许	MA	
	Soldering,: false soldering/tinning/tin beads 假焊/连锡/锡珠	Not allowed 不允许	MA	
POL 偏光片	Scratches 划伤	1. W≤0.05mm；L≤5mm，Ignore（忽略） 2. 0.05mm＜W≤0.10mm ; L≤5mm ; N≤3 ; DS≥10mm 3. 0.10mm＜W；5mm＜ L， Not allowable（不允许）		MI
	Dent 凹凸印	1. D≤0.15mm，Ignore（忽略） 2. 0.15mm＜D≤0.30mm；N≤3；DS≥10mm 3. 0.30mm＜D，Not allowable（不允许）		MI
	Bubbles 气泡	1. D≤0.15mm，Ignore（忽略） 2. 0.15mm＜D≤0.30mm；N≤3；DS≥10mm 3. 0.30mm＜D，Not allowable（不允许）		MI
	Point defects 点状不良	1. D≤0.15mm，Ignore（忽略） 2. 0.15mm＜D≤0.30mm；N≤3；DS≥10mm 3. 0.30mm＜D，Not allowable（不允许）		MI
	Edge bubbles 边缘气泡	1. Within 1/2BM of the display area, it is not allowed 显示区往外 1/2BM 区域内，不允许 2. The display area is 1/2 outside the BM area, and it is not controlled 显示区往外1/2BM区域以外，不管控		MI
	Dirty/watermarked 脏污/水印	No dirt/water lines/finger marks are allowed, and must be wiped clean 不允许有脏污/水印/手指印，须擦拭干净方可		MI
	Warping 起翘	Not allowed 不允许		MI
	Attaching offset 贴偏	It is necessary to completely cover the display area outward, within the 1/2BM area, or without leaking POL edges after TP is attached 需完整覆盖显示区往外、1/2BM区以内或贴合TP后不会出现漏偏光片边缘		MI
	Mixture 混料	Mixing different types of POL or not using POL as required by the BOM，not allowed 不允许混贴不同型号的POL或未按BOM要求使用POL	MA	

Inspection area 检验区域	Inspection items 检验项目	Inspection specifications 检验规格	Defect category 缺陷类别	
TP&CG	Point defects 点状不良	1. D≤0.15mm，Ignore（忽略） 2. 0.15mm＜D≤0.30mm；N≤3；DS≥10mm 3. 0.30mm＜D，Not allowable（不允许）		MI
	Scratches 划伤	1. W≤0.05mm；L≤5mm，Ignore（忽略） 2. 0.05mm＜W≤0.10mm ; L≤5mm ; N≤3 ; DS≥10mm 3. 0.10mm＜W；5mm＜ L， Not allowable（不允许） 4. There is a feeling scratch，Not allowable 有感划伤，不允许		MI
	Edges and corners cracked 崩角/崩边	1. Product front /产品正面： Edge and corner chipping is not allowed 崩角、崩边不允许 2. Product back /产品背面: X≤ 0.5 , Y≤0.5，Z≤1/2T；N≤3；DS≥10mm		MI
	Silk screen 丝印	The silk screen is clear, complete and correct 丝印清晰、完整、内容正确		MI
	Dirty 脏污	Non-wipeable dirt, not allowed 不可擦拭的脏污，不允许		MI
	Broken 破损	Not allowable 不允许	MA	
	Ink color aberration 油墨色差	ΔE>1，Not allowable（不允许）		MI
	Cover pinholes 针孔	1. D≤0.10mm , N≤3 , DS≥10mm，allowable 2. D＞0.10mm，intensive pinholes（密集型针孔），Not allowable（不允许）		MI
	IR holes IR孔	Dirt, deviation, color difference, etc. are not allowed 不允许脏污、偏位、色差等		MI
BL 背光	Backlight separation 背光分离	Not allowable 不允许		MI
	Deformation of rubber iron and rubber frame 胶铁、胶框变形	Use the plug gauge 0.3mm on the flat surface and can snap in and judge NG 在平面上使用塞规0.3mm卡翘曲位置，能卡进判定NG		MI
	The iron frame is oxidized and not tightened 铁框氧化、卡不紧	Not allowable 不允许		MI
	Backlight sticky solder beads, glue, etc 背面粘锡珠、残胶等	Not allowable 不允许		MI
	Lnkjet coding，Barcode， QR code 喷码/条码/二维码	The lnkjet coding is clear and complete, the barcode and QR code can be scanned normally, and the content and format match 喷码清晰完整、条码和二维码可正常扫描，内容和格式相符		MI
	Accessories (protective film, double-sided tape, insulating adhesive, etc.) 辅料（保护膜、双面胶、绝缘胶等）	Defects such as missing pastes, sticking deviations, defects, and fractures are not allowed 不允许有漏贴、贴偏、残缺、断裂等缺陷		MI

4.3 Electrical test specifications /电性检查规格
(D： diameter, W： width, L： length, N： quantity, DS： spacing)

Inspection items 检验项目	Inspection specifications 检验规格	Defect category 缺陷类别	
Glass bright spots/dark spots 玻璃亮点/暗点	1. D≤0.15mm，Ignore（忽略） 2. 0.15mm＜D≤0.30mm；N≤3；DS≥10mm 3. 0.30mm＜D，Not allowable（不允许）		MI
Mura	Use ND5% filter masking, visual invisibility is OK, 200~300Lux 使用ND5%遮盖，目视不可见即为OK，200~300Lux		MI
Small bright dot 细碎亮点	Use ND5% filter masking, visual invisibility is OK 使用ND5%遮盖，目视不可见即为OK		MI
Light leakage 漏光	1. Use ND5% filter masking, visual invisibility is OK 使用ND5%遮盖，目视不可见即为OK 2. If necessary, sign off on the sample 必要时，签限定样		MI
Backlight black/white dots 背光黑点/白点	1. D≤0.15mm，Ignore（忽略） 2. 0.15mm＜D≤0.30mm；N≤3；DS≥10mm 3. 0.30mm＜D，Not allowable（不允许）		MI
Linear foreign bodies 线状异物（异物毛丝等）	1. W≤0.05mm；L≤5mm，Ignore（忽略） 2. 0.05mm＜W≤0.10mm ; L≤5mm ; N≤3 ; DS≥10mm 3. 0.10mm＜W；5mm＜ L， Not allowable（不允许）		MI
Black/White Print 黑印/白印	Use ND5% filter masking, visual invisibility is OK 使用ND5%遮盖，目视不可见即为OK		MI
The display is uneven 显示不均匀	Use ND5% filter masking, visual invisibility is OK 使用ND5%遮盖，目视不可见即为OK		MI
The brightness is uneven 亮度不均匀	Brightness uniformity＜85.0%，Not allowable 亮度均匀性＜85.0%，不允许		MI
Displacement of the membrane 膜材移位	Not allowable 不允许		MI
Interference pattern/Newtonian pattern 干涉纹/牛顿纹	Not allowable 不允许		MI
Display abnormal 显示异常	Not allowable 不允许	MA	
No display 无显示	Not allowable 不允许	MA	
Line/Missing Drawing 线条/缺画	Not allowable 不允许	MA	
Splash screen 闪屏	Not allowable 不允许	MA	
LCD grid LCD网格	Not allowable 不允许	MA	
Afterimage 残影	Not allowable 不允许	MA	
Wrong viewing angle 视角错误	Not allowable 不允许	MA	
No touch 无触摸	Not allowable 不允许	MA	
Touch the jump point 触摸跳点	Not allowable 不允许	MA	
Not sensitive 触摸不灵敏	Not allowable 不允许	MA	