Request information

PRODUCT SPECIFICATION

TFT-LCD MODULE

Module No: 100366-01

☑ Preliminary Specification

☐ Approval Specification

Designed by	Checked by	Approved by

Final Approval by Customer

Approved by	Comment

For more information, contact us:

WWW.DCLTEK.COM | 1-800-407-8917 | SALES@DCLTEK.COM

※The specification of “TBD” should refer to the measured value of sample . If there is difference between the design specification and measured value, we naturally shall negotiate and agree to solution with customer.

This document contains confidential and proprietary information of DCL Technologies, Inc. It is provided solely for the recipient's evaluation and may not be reproduced, disclosed, or distributed, in whole or in part, without the prior written consent of DCL Technologies, Inc.

1.Document Revision History

Version	Contents	Date	Note
V0	Original	2023.03.21	

2. General Specifications

	Item	Specification	Unit	Remark
1	LCD Size	3.54	inch	-
2	Panel Type	IPS	-	-
4	Resolution	800 x RGB x 640	pixel	-
5	Display Mode	Normally Black	-	-
6	Number of Colors	16.7M	-	-
7	Color Gamut	60%	-	TYP
8	Contrast Ratio	1500	-	TYP
9	Luminance	900	nit	TYP
10	Module Size	97.60(W) x83.79(L) x4.04(H)	mm	Note
11	Panel Active Area	90.0 (W) x 72.0 (L)	mm	Note
12	Pixel Pitch	0.08625(H) x 0.08625(V)	mm	-
13	Weight	-	g	-
14	Driver IC	FL5893DA	-	-
15	Light Source	12 white LED in 6S2P	-	
16	Interface	3line SPI + 24bit RGB	-	-
17	Operating Temperature	-30 ~ +85	℃	-
18	Storage Temperature	-40 ~ +85	℃	-

3. ABSOLUTE MAXIMUM RATINGS

Parameter	Symbol	Min	Max	Unit	Note
Power Supply voltage 1	VCI~GND	-0.3	+3.6	V	
Power Supply voltage 2	IOVCC~GND	-0.3	+3.6	V	
Logic Input Voltage Range	V_{IN}	-0.3	IOVCC+0.5	V	
Logic Output Voltage Range	V_O	-0.3	IOVCC+0.5	V	
Operating temperature	Topr	-30	+85	℃	
Storage temperature	Tstg	-30	+90	℃	

* The absolute maximum rating values of this product are not allowed to be exceeded at any times. Should a module be used with any of the absolute maximum ratings exceeded, the characteristics of the module may not be recovered, or in an extreme case, the module may be permanently destroyed.

4. DC ELECTRICAL CHARACTERISTICS

4.1 Driving TFT LCD Panel

AGND = GND = 0V, Ta = 25℃

Parameter	Symbol	Min	Typ	Max	Unit
Supply voltage for analog circuit	VCI	2.5	3.3	3.6	V
Supply voltage for logic circuit	IOVCC	1.65	1.8	3.3	V
Input voltage 'H'level	V_{IH}	0.7*IOVCC	—	IOVCC	V
Input voltage 'L'level	V_{IL}	GND	—	0.3*IOVCC	V
Output voltage 'H'level	V_{OH}	0.8*IOVCC	—	IOVCC	V
Output voltage 'L'level	V_{OL}	GND	—	0.2*IOVCC	V

4.2 Back-Light Unit Characeristics

The back-light system is an edge-lighting type with 6 white LEDs. The characteristics of the back-light are shown in the following tables.

Characteristics	Symbol	Min.	Type	Max.	Unit	Notes
Forward Voltage	V_F	--	19.8	--	V	-
Forward current	I_F	--	40	--	mA	-
Luminance(With LCD)	Lv	--	900	--	cd/m^2	-
LED life time	N/A	----	30000	--	Hr	Note 1

Using condition: constant current driving method If= 1×20mA (+/-10%)

5. TIMING CHARACTERISTICS

5.1 Serial Interface Characteristics(3-line serial)

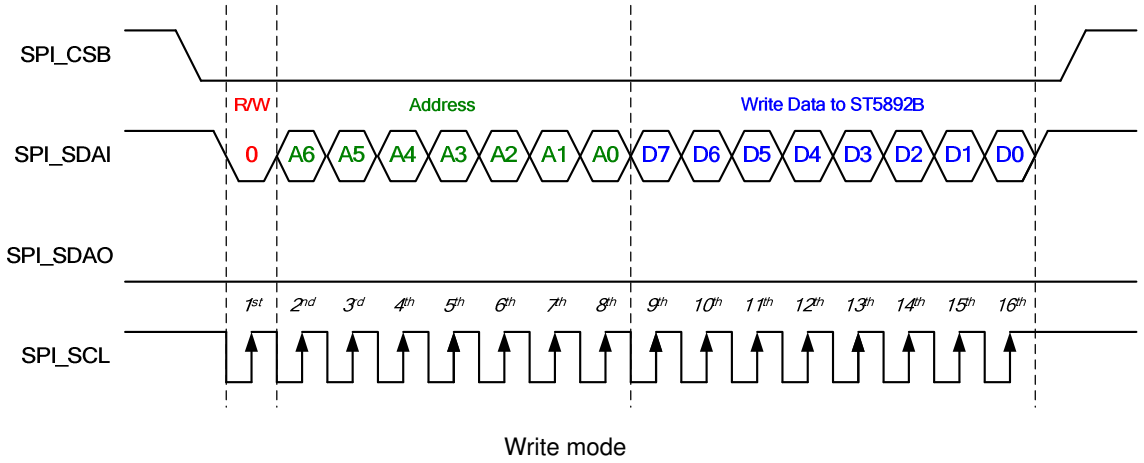

Figure 5.1 3-line serial Interface Timing Characteristics

Ta=25℃, IOVCC=1.65~3.7V, VCC=2.5~3.7V

Signal	Symbol	Parameter	Min	Max	Unit	Description
CSX	T_{CSS}	Chip select setup time(write)	15	-	ns	
	T_{CSH}	Chip select hold time(write)	15	-	ns	
	T_{CSS}	Chip select setup time(read)	60	-	ns	
	T_{SCC}	Chip Select hold time(read)	60	-	ns	
	T_{CHW}	Chip Select 'H' pulse width	40	-	ns	
SCL	T_{SCYCW}	Serial clock cycle(write)	66	-	ns	Write Command & Data Ram
	T_{SHW}	SCL 'H' pulse width(write)	15	-	ns	
	T_{SLW}	SCL 'L' pulse width(write)	15	-	ns	
	T_{SCYCR}	Serial clock cycle(read)	150	-	ns	Read Command & Data Ram
	T_{SHR}	SCL 'H' pulse width(read)	60	-	ns	
	T_{SLR}	SCL 'L' pulse width(read)	60	-	ns	
SDA (DIN)	T_{SDS}	Data setup time	10	-	ns	
	T_{SDH}	Data hold time	10	-	ns	

Note : The rising time and falling time (Tr, Tf) of input signal are specified at 15 ns or less. Logic high and low levels are specified as 30% and 70% of IOVCCfor Input signals.

Table 5.1 3-line Serial Interface Characteristics

Figure 5.1.4 Switching the Clock Lane between Clock Transmission and LP Mode

5.2 RGB Interface Characteristics

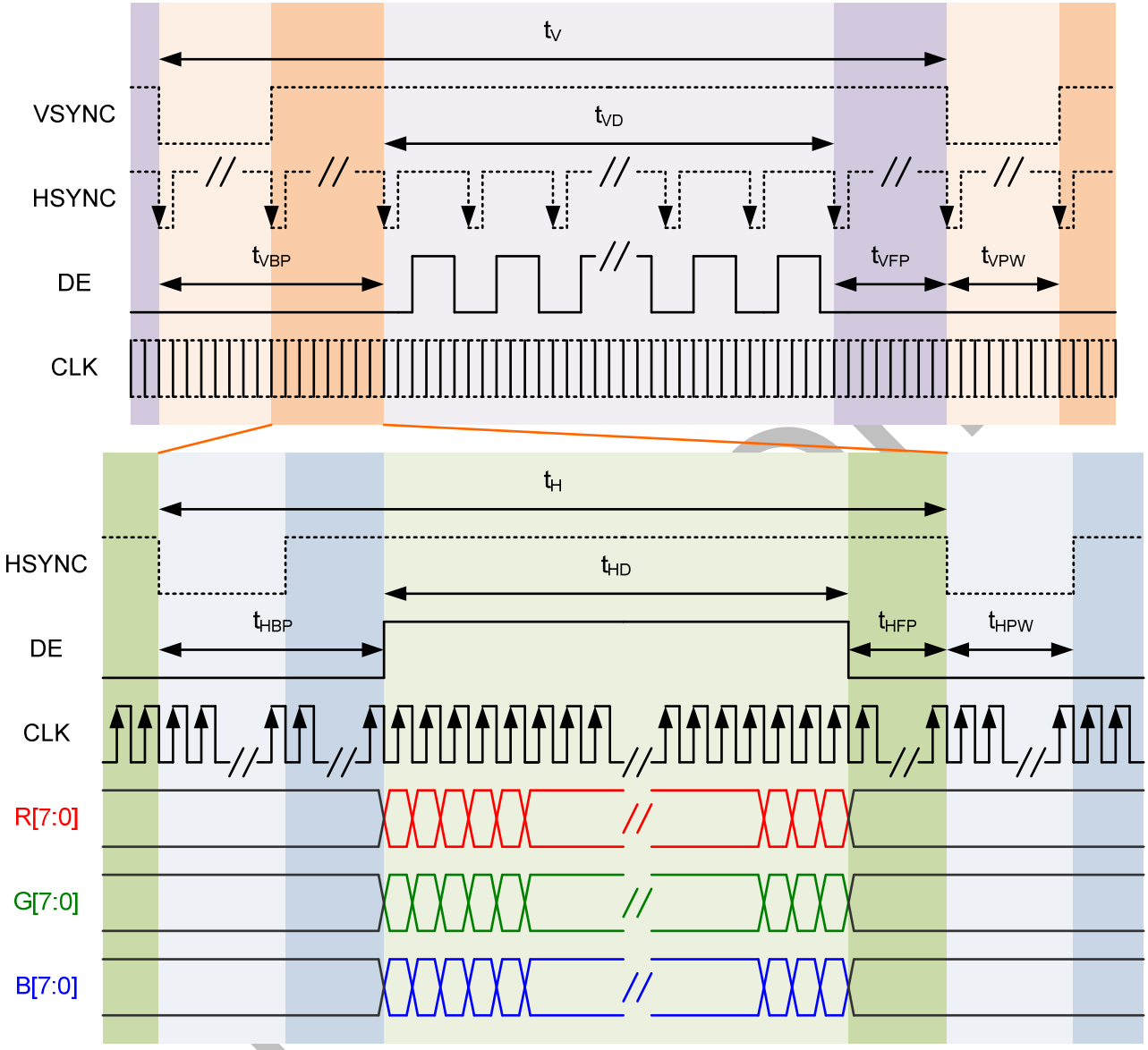

800 x 640 (2-Port)

Parameter	Symbol	Value			Unit	Note
		Min.	Typ.	Max.		
CLK frequency	tCLK	44.4	45.6	80.7	Mhz	
Horizontal blanking time	tHBT	40	40	300	tCLK	tHBP + tHFP
Horizontal display area	tHD		800		tCLK	
Horizontal period	tH	1000	1000	1260	tCLK	
Horizontal pulse width	tHPW	2	2	2	tCLK	
Vertical blanking time	tVBT	20	40	300	tH	tVBP + tVFP
Vertical display area	tVD		640		tH	
Vertical period	tV	740	760	1020	tH	
Vertical pulse width	tVPW	2	2	2	tH	
Frame rate	FR	60	60	60	Hz	

5.3 VCI（VDD） IOVCC(VDDI) off/on power sequence

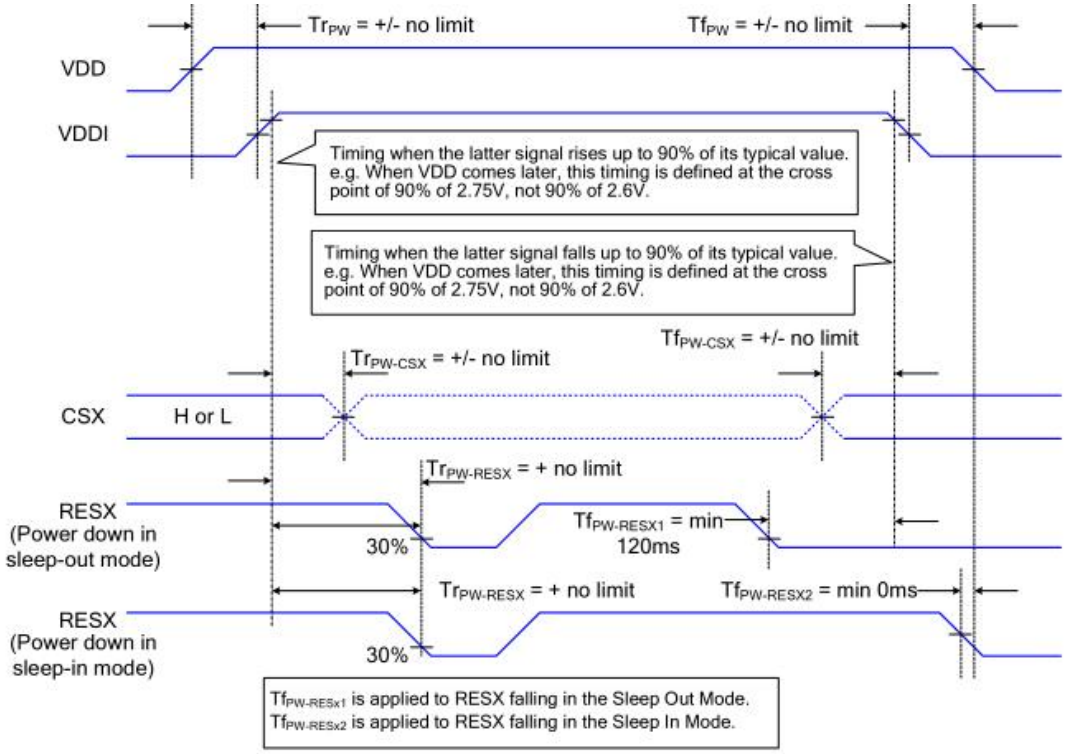

Figure 5.3.1 VCI/VDDI input power off/on sequence

6. Reset Timing

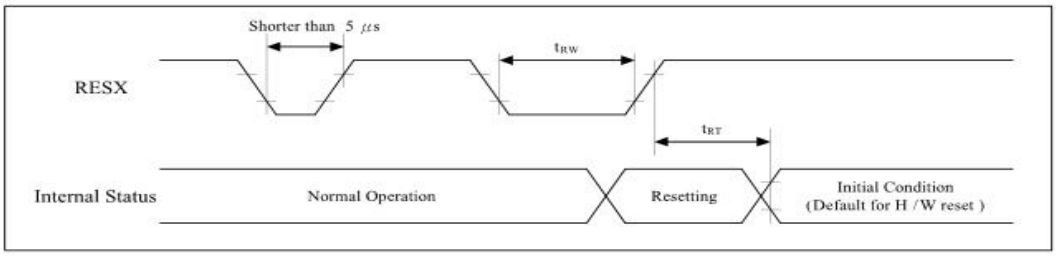

Signal	Symbol	Parameter	Min.	Max.	Unit
RESX	t_{RW}	Reset pulse duration	10(Note)	-	us
	t_{RT}	Reset cancel	-	10(Note)	ms
			-	120(Note)	ms

Notes:

1. The reset cancel also includes required time for loading ID bytes, VCOM setting and other settings from EEPROM (or similar device) to registers.

This loading is done every time when there is HW reset cancel time (tRT) within 10 ms after a rising edge of RESX.

2. Spike due to an electrostatic discharge on RESX line does not cause irregular system reset according

to the table below ：

RESX Pulse	Action
Shorter than 5us	Reset Rejected
Longer than 9us	Reset
Between 5us and 9us	Reset starts

3. During the Resetting period, the display will be blanked(The display is entering blanking sequence, which maximum time is 120 ms, when Reset

Starts at Sleep-Out status. The display remains the blank state in Sleep-In mode). Then return to Default condition for Hardware Reset

4. Spike Rejection also applies during a valid reset pulse as shown below ：

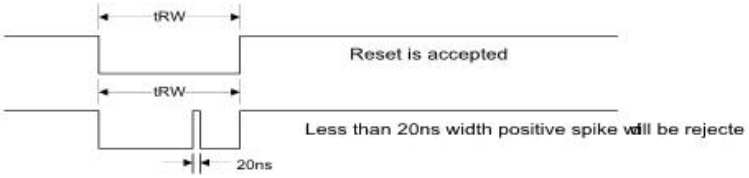

5. When Reset applied during Sleep-In Mode.
6. When Reset applied during Sleep-Out Mode
7. It is necessary to wait 10ms after releasing RESX before sending commands. Also Sleep Out command cannot be sent for 120 ms.

7. EXTERNAL DIMENSIONS

Front View

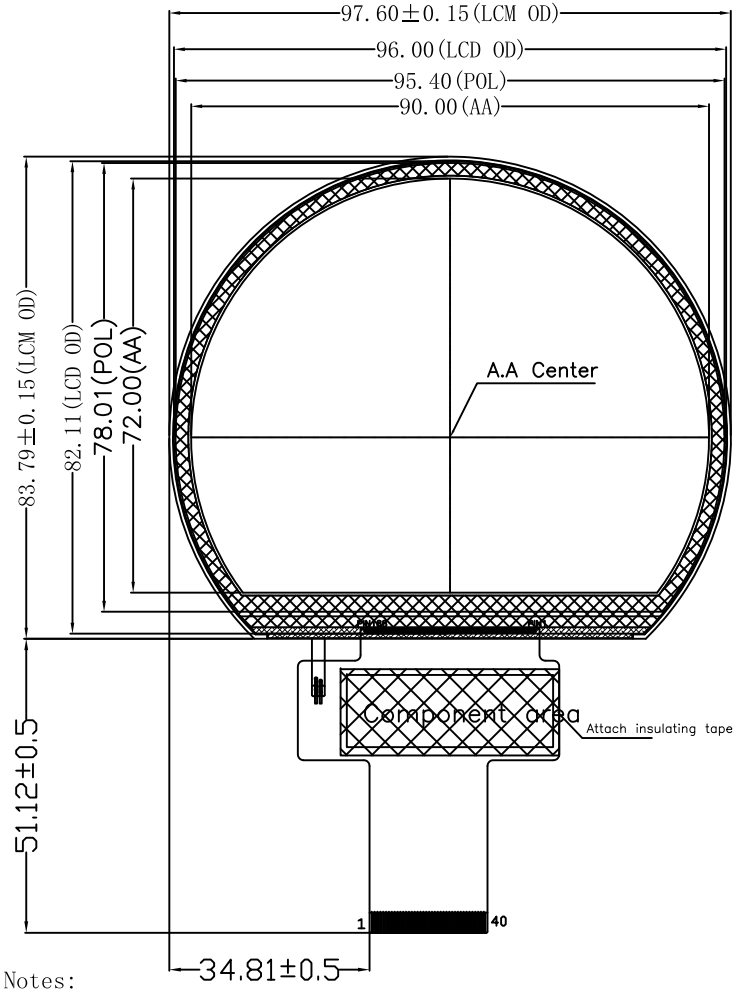

Side View

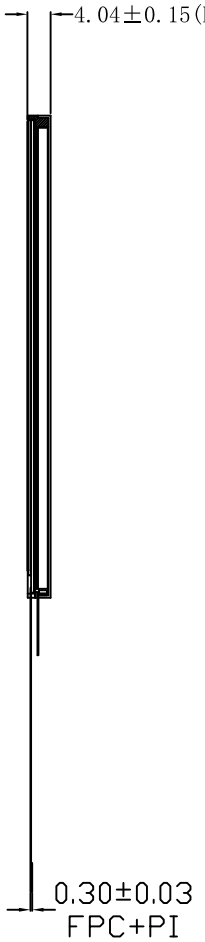

Back View

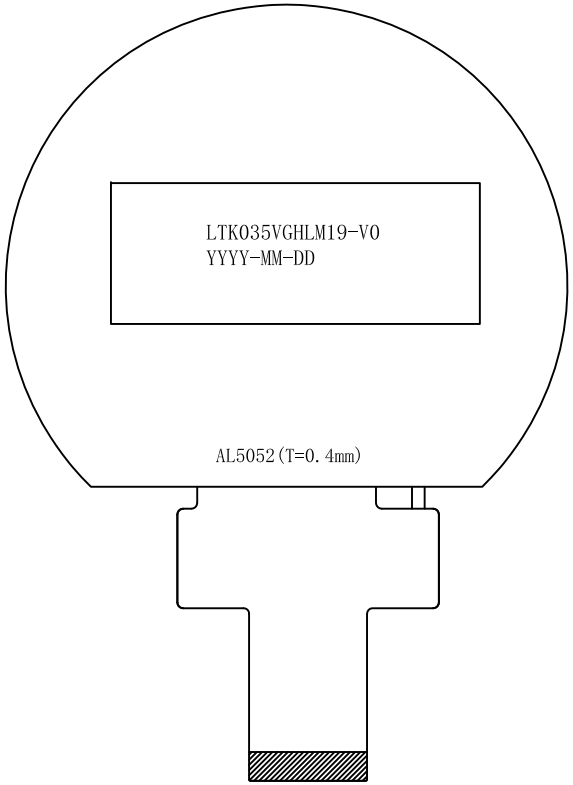

PIN DESCRIPTION

1	LED-
2	LED+
3	GND
4	VCC
5	R0
6	R1
7	R2
8	R3
9	R4
10	R5
11	R6
12	R7
13	G0
14	G1
15	G2
16	G3
17	G4
18	G5
19	G6
20	G7
21	B0
22	B1
23	B2
24	B3
25	B4
26	B5
27	B6
28	B7
29	GND
30	DOTCLK
31	DISP
32	HSYNC
33	VSYNC
34	DEN
35	VCC_OTP
36	GND
37	NRESET
38	SDI
39	SCL
40	CS

LED CIRCUIT DIAGRAM:

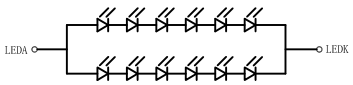

If=180mA Vf=16.8~20.4V

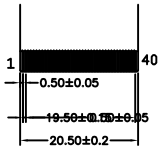

Notes:

1. Display : 3.54″, TFT
2. Resolution: 800xRGBx640
3. LCD Viewing Direction: ALL,
4. Display Mode: Normally Black
5. Drive IC: ST5893DA
6. LCM Bringhtness: 900cd/m²(TYP),uniformity≥80%
7. unmark Tolerance:±0.2
8. OPERATING TEMP: -30° C~ +85° C
9. STORAGE TEMP: -40° C~ +90° C
10. Requirements on Environmental Protection: ROHS

REV	DESCRIPTION	DATE	NAME
3			
2			
1			
0	NEW	2023.02.13	IAN

LEADTEK DISPLAY

LEADTEK COMPANY LIMITED

SCALE:1/1	UNIT:mm	PAGE:1/1	Approve	Check	Drawn
Part No:	LTK035VGHLM19	VER:V0		JONA	IAN
Customer No:					

8. INTERFACE SIGNAL

Pin No.	Symbol	Description
1	LED-	LED backlight cathode
2	LED+	LED backlight anode
3	GND	Power ground
4	VCC	Power supply for the analog power
5-12	R0-R7	Data bus
13-20	G0-G7	Data bus
21-28	B0-B7	Data bus
29	GND	Power ground
30	DOTCLK	Pixel clock signal in RGB interface
31	DISP	DISP
32	HSYNC	Horizontal synchronizing signal input pin
33	VSYNC	Vertical synchronizing signal input pin
34	DE	Data enable signal in RGB I/F mode
35	VCC-MTP	Power supply for the analog power
36	GND	Power ground
37	RESET	Reset signal(low active)
38	SDA	Serial data input pin in serial bus system interface
39	SCL	Pixel clock signal input pin
40	CS	Chip select

9. ELECTRO-OPTICAL CHARACTERISTICS

9.1 Optical Specification

Item		Symbol	Condition	Min.	Typ.	Max.	Unit	Note
Transmittance (with Polarizer)		T (%)	Θ=0 Normal viewing angle	2.36	2.62	—	%	Measuring with polarizer, for reference only Base on Vop=6.2V
Transmittance (without Polarizer)		T (%)		9.01	10.01	—	%	
Contrast Ratio		CR		1000	1200	—	—	(1)(2)
Response Time		$T_{R+}T_F$		—	25		msec	(1)(3)
Color Gamut	(%)			65	70	—	%	C-light
Color Chromaticity (CIE1931)	White	W_x		-0.02	0.293	+0.02	—	(1)(4) CF glass C-light
		W_y			0.320			
	Red	R_x			0.651		—	
		R_Y			0.317			
	Green	G_x			0.261		—	
		G_Y			0.570			
	Blue	B_x			0.138		—	
		B_Y			0.083			
Viewing Angle	Hor.	Θ_L	CR>10	80	85	—	—	(1)(4) Measuring with polarizer, for reference only
		Θ_R		80	85	—		
	Ver.	Θ_U		80	85	—		
		Θ_D		80	85	—		
Optimal View Direction		Free						(5)

Note 4. Definition of Response Time (Ton, Toff), The response time is defined as the time interval between the 10% and 90% amplitudes.

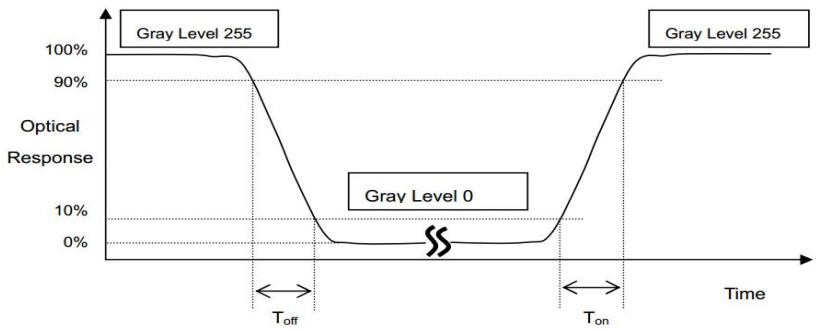

Note 5. Definition of view angle(θ，ψ)：

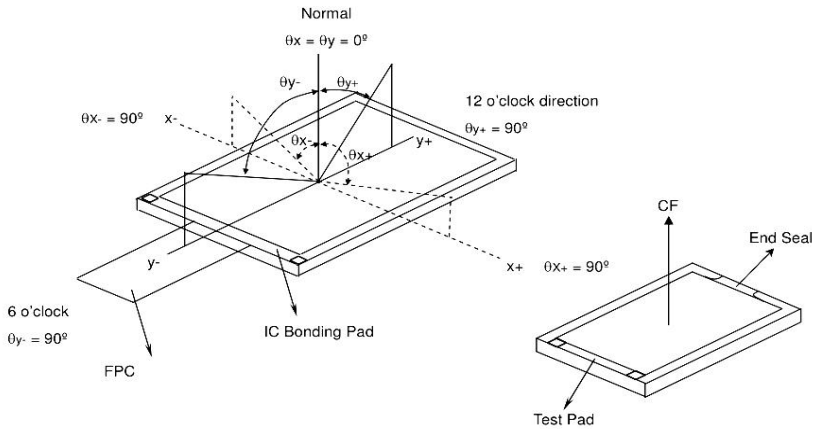

Note 6. The LCD module should be stabilized at a given temperature for 20 minutes to avoid abrupt temperature change during measuring. In order to stabilize the luminance, the measurement should be executed after lighting Backlight for 20 minutes in a windless room. Measouring method for Contrast ratio, surface luminance, Luminance uniformity,CIE(x,y) chromaticity.

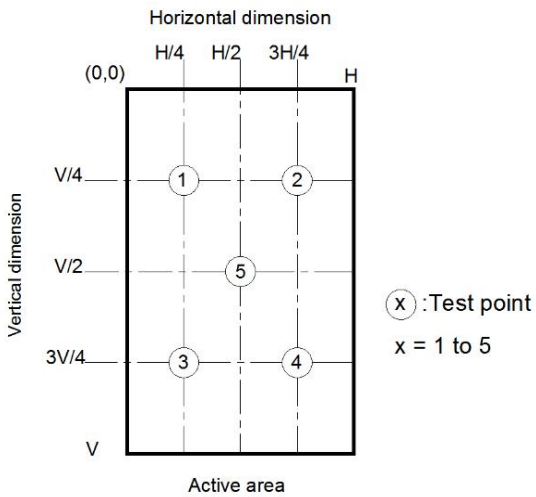

Light spot size ∅ =7mm, 500mm distance from the LCD surface to detector lens measurement instrument is TOPCON's luminance meter BM-7

10. RELIABILITY TEST

Reliability test conditions (Polarizer characteristics null)

No.	Items	Condition	Inspection after test
1	High Temperature Storage	T = 90℃±2℃ for 48 hr	Inspection after 4 hours storage at room temperature, the sample shall be free from defects: 1.Air bubble in the LCD 2.Sealleak; 3.Non-display; 4.missing segments; 5.Glass crack; 6.Current Idd is twice higher than initial value.
2	Low Temperature Storage	T = -40℃±2℃ for 48 hr	
3	High Temperature Operating	T = 85℃±2℃ for 48 hr	
4	Low Temperature Operating	T = -30℃±2℃ for 48 hr (But no condensation of dew)	
5	High Temp. and High Humidity Operating	T = 60℃±5℃ /90% for 48 hr (But no condensation dew)	
6	Thermal Shock	-20±2°C~25~70±2°C×10cycles (30min.) (5min.) (30min.)	
7	Dropping test (non-operation)	Drop to the ground from 76cm height, one time, every side of carton. (Packing condition)	
8	Packing Vibration (non-operation)	Frequency：10Hz~55Hz~10Hz Amplitude：1.0mm, X，Y，Z direction for total 3hours (Packing condition)	
9	ESD	Voltage:±6KV R: 330Ω C: 150pF Air discharge, 10time	

Note:

(1)The test samples should be applied to only one test item.
(2)Sample size for each test item is 5~10pcs.
(3)In case of malfunction defect caused by ESD damage, if it would be recovered to normal state after resetting, it would be judge as a good part.
Using ionizer(an antistatic blower) is recommended at working area in order to reduce electro-static voltage.
When removing protection film from LCM panel, peel off the tag slowly (recommended more than one second) while blowing with ionizer toward the peeling face to minimize ESD which may damage electrical circuit.
(4) Please use automatic switch testing mode when test operating mode.

11. INSPECTION CRITERION

This specification is made to be used as the standard acceptance/rejection criteria for Normal LCM Product.

1.Sample plan

Sampling plan according to GB/T2828.1-2003/ISO 2859-1：1999 and ANSI/ASQC Z1.4-1993,normal level 2 and based on:

Major defect: AQL 0.65
Minor defect: AQL 1.0

2. Inspection condition

Viewing distance for cosmetic inspection is about 30cm with bare eyes, and under an environment of 20~40W light intensity, all directions for inspecting the sample should be within 45° against perpendicular line. (Normal temperature 20~25°C and normal humidity 60±15%RH).

3. Definition of inspection zone in LCD.

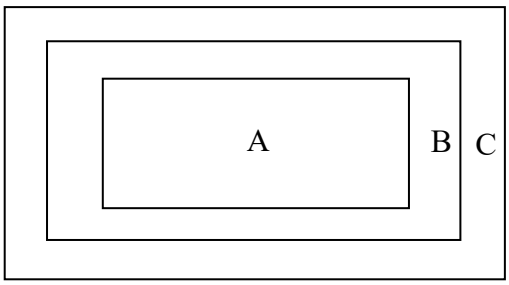

Zone A: character/Digit area

Zone B: viewing area except Zone A (Zone A + Zone B=minimum Viewing area)

Zone C: Outside viewing area (invisible area after assembly in customer's product)

Fig.1 Inspection zones in an LCD.

Note: As a general rule, visual defects in Zone C are permissible, when it is no trouble for quality and assembly of customer's product.

4.Standards of inspection items

4.1 Major Defect

Item No	Items to be inspected	Inspection Standard	Classification of defects
4.1.1	All functional defects	1.No display	Major
		2.Display abnormally	
		3.Missing vertical，horizontal segment	
		4.Short circuit	
		5. Back-light no lighting, flickering and abnormal lighting.	

4.1.2	Missing	Missing component	
4.1.3	Outline dimension	Overall outline dimension beyond the drawing is not allowed.	
4.1.4	linearity	No more than 1.5%	

4.2 Cosmetic Defect

Item No	Items to be inspected	Inspection Standard				Classification of defects
4.2.1	Clear Spots Black and white Spot defect Pinhole, Foreign Particle, polarizer Dirt	For dark/white spot, sizeΦis defined as Φ=(x + y)/2 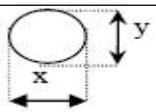				Minor
		1				
		Zone / Size(mm)	Acceptable Qty			
			A	B	C	
		Φ≤0.15	Ignore		Ignore	
		0.15＜Φ≤0.20	2			
		0.20＜Φ≤0.30	1			
		Φ＞0.30	0			
	Clear Spots TP Dirt	2				Minor
		Zone / Size(mm)	Acceptable Qty			
			A	B	C	
		Φ≤0.15	Ignore		Ignore	
		0.15＜Φ≤0.20	2			
		0.20＜Φ≤0.30	1			
		Φ＞0.30	0			
	Dim Spots Circle shaped and dim edged defects	3				Minor
		Zone / Size(mm)	Acceptable Qty			
			A	B	C	
		Φ≤0.2	Ignore		Ignore	
		0.20＜Φ≤0.40	2			
		0.40＜Φ≤0.60	1			
		Φ＞0.60	0			

Item No	Items to be inspected	Inspection Standard					Classification of defects
4.2.2	Line defect Black line, White line, Foreign material on polarizer	Size(mm)		Acceptable Qty			Minor
		L(Length)	W(Width)	Zone			
				A	B	C	
		Ignore	W≤0.05	Ignore		Ignore	
		L ≤5.0	0.05＜W≤0.08	2			
			W＞0.08	0			
	Foreign material on TP film	The line can be seen after mobile phone in the operating condition:					Minor
		Size(mm)		Acceptable Qty			
		L(Length)	W(Width)	Zone			
				A	B	C	
		Ignore	W≤0.05	Ignore		Ignore	
		L ≤5.0	0.05＜W≤0.08	3			
			W＞0.08	0			
4.2.3	Dim line defect Polarizer scratch TP film scratch	If the scratch can be seen after mobile phone cover assembling or in the operating condition, judge by the line defect of 4.2.2. If the scratch can be seen only in non-operating condition or some special angle, judge by the following.					Minor
		Size(mm)		Acceptable Qty			
		L(Length)	W(Width)	Zone			
				A	B	C	
		Ignore	W≤0.03	Ignore		Ignore	
		5.0＜ L≤10.0	0.03＜W≤0.05	2			
		L≤5.0	0.05＜W≤0.08	1			
			W＞0.08	0			
4.2.4	Polarize Air bubble	Air bubbles between glass & polarizer					Minor
		Size(mm) \ Zone		Acceptable Qty			
				A	B	C	
		Φ≤0.20		Ignore		Ignore	
		0.20＜Φ≤0.3		2			
		Φ＞0.30		0			

Item No	Items to be inspected	Inspection Standard			Classification of defects
4.35	Glass defect	(i) Chips on corner A:LCD Glass defect 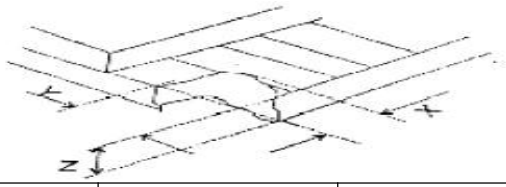			Minor
		X(mm)	Y(mm)	Z(mm)	
		≤3.0	≤3.0	Disregard	
		Notes: S=contact pad length Chips on the corner of terminal shall not be allowed to extend into the ITO pad or expose perimeter seal. B:TP Glass defect 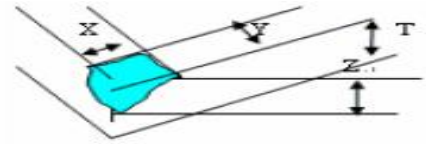			
		X(mm)	Y(mm)	Z(mm)	
		≤3.0	≤3.0	Disregard	
		(ii)Usual surface cracks A:LCD Glass defect 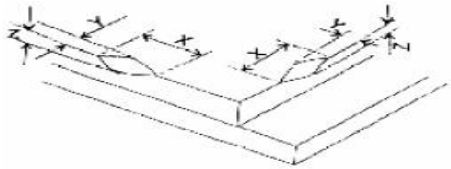			
		X(mm)	Y(mm)	Z(mm)	
		≤3.0	<Inner border line of the seal	Disregard	
		B:TP Glass defect 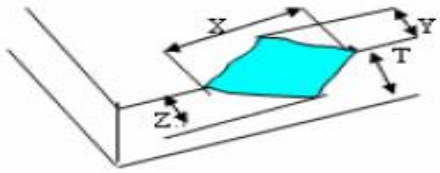			
		X(mm)	Y(mm)	Z(mm)	
		≤6.0	＜2.0	Disregard	
		(iii) Crack Cracks tend to break are not allowed. 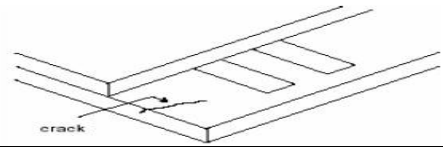			

12. PRECAUTIONS FOR USE OF LCD MODULES

1. Handling Precautions

(1) The display panel is made of glass and polarizer. As glass is fragile. It tends to become or chipped during handling especially on the edges. Please avoid dropping or jarring. Do not subject it to a mechanical shock by dropping it or impact.

(2) If the display panel is damaged and the liquid crystal substance leaks out, be sure not to get any in your mouth. If the substance contacts your skin or clothes, wash it off using soap and water.

(3) Do not apply excessive force to the display surface or the adjoining areas since this may cause the color tone to vary. Do not touch the display with bare hands. This will stain the display area and degraded insulation between terminals (some cosmetics are determined to the polarizer).

(4) The polarizer covering the display surface of the LCD module is soft and easily scratched. Handle this polarizer carefully. Do not touch, push or rub the exposed polarizers with anything harder than an HB pencil lead (glass, tweezers, etc.). Do not put or attach anything on the display area to avoid leaving marks on. Condensation on the surface and contact with terminals due to cold will damage, stain or dirty the polarizer. After products are tested at low temperature they must be warmed up in a container before coming is contacting with room temperature air.

(5) If the display surface becomes contaminated, breathe on the surface and gently wipe it with a soft dry cloth. If it is heavily contaminated, moisten cloth with one of the following solvents

- Isopropyl alcohol
- Ethyl alcohol

Do not scrub hard to avoid damaging the display surface.

(6) Solvents other than those above-mentioned may damage the polarizer. Especially, do not use the following.

- Water
- Ketone
- Aromatic solvents

Wipe off saliva or water drops immediately, contact with water over a long period of time may cause deformation or color fading. Avoid contacting oil and fats.

(7) Exercise care to minimize corrosion of the electrode. Corrosion of the electrodes is accelerated by water droplets, moisture condensation or a current flow in a high-humidity environment.

(8) Install the LCD Module by using the mounting holes. When mounting the LCD module make sure it is free of twisting, warping and distortion. In particular, do not forcibly pull or bend the I/O cable or the backlight cable.

(9) Do not attempt to disassemble or process the LCD module.

(10) NC terminal should be open. Do not connect anything.

(11) If the logic circuit power is off, do not apply the input signals.

(12) Electro-Static Discharge Control，Since this module uses a CMOS LSI, the same careful attention should be paid to electrostatic discharge as for an ordinary CMOS IC. To prevent destruction of the elements by static electricity, be careful to maintain an optimum work environment.

- Before remove LCM from its packing case or incorporating it into a set, be sure the module and your body have the same electric potential. Be sure to ground the body when handling the LCD modules.
- Tools required for assembling, such as soldering irons, must be properly grounded. Make certain the AC power source for the soldering iron does not leak. When using an electric screwdriver to attach LCM, the screwdriver should be of ground potentiality to minimize as much as possible any transmission of electromagnetic waves produced sparks coming from the commutator of the motor.
- To reduce the amount of static electricity generated, do not conduct assembling and other work under dry conditions. To reduce the generation of static electricity be careful that the air in the work is not too dried. A relative humidity of 50%-60% is recommended. As far as possible make the electric potential of your work clothes and that of the work bench the ground potential
- The LCD module is coated with a film to protect the display surface. Exercise care when peeling off this protective film since static electricity may be generated

(13)Since LCM has been assembled and adjusted with a high degree of precision, avoid applying excessive shocks to the module or making any alterations or modifications to it.

- Do not alter, modify or change the shape of the tab on the metal frame.
- Do not make extra holes on the printed circuit board, modify its shape or change the positions of components to be attached.
- Do not damage or modify the pattern writing on the printed circuit board.
- Absolutely do not modify the zebra rubber strip (conductive rubber) or heat seal connector.
- Except for soldering the interface, do not make any alterations or modifications with a soldering iron.
- Do not drop, bend or twist LCM.

2. Storage precautions

2.1 When storing the LCD modules, avoid exposure to direct sunlight or to the light of fluorescent lamps.

2.2 The LCD modules should be stored under the storage temperature range. If the LCD modules will be stored for a long time, the recommend condition is:Temperature : 0℃ ～ 40℃ Relatively humidity: ≤80%

2.3 The LCD modules should be stored in the room without acid, alkali and harmful gas.

2.4 The LCD modules should be no falling and violent shocking during transportation, and also should avoid excessive press, water, damp and sunshine.