Request information

PRODUCT SPECIFICATION

TFT-LCD MODULE

Module No: 100358-01

☑ Preliminary Specification

☐ Approval Specification

Designed by	Checked by	Approved by

Final Approval by Customer

Approved by	Comment

For more information, contact us:

WWW.DCLTEK.COM | 1-800-407-8917 | SALES@DCLTEK.COM

※The specification of “TBD” should refer to the measured value of sample . If there is difference between the design specification and measured value, we naturally shall negotiate and agree to solution with customer.

This document contains confidential and proprietary information of DCL Technologies, Inc. It is provided solely for the recipient's evaluation and may not be reproduced, disclosed, or distributed, in whole or in part, without the prior written consent of DCL Technologies, Inc.

1.Document Revision History

Version	Contents	Date	Note
V0	NEW	2024.01.10	

2. General Description

N0	Item	Specification	Unit	Remark
1	LCD Size	18.5"TFT	inch	-
2	Panel Type	IPS	-	-
4	Number of pixels	1920(H) x3(RGB)x 1080 (V)	pixel	-
5	Display mode	Normally Black	-	-
6	Display colors	16.7M	-	-
7	Viewing Direction	ALL	-	-
10	Outline Dimension	430.37(H) x 254.6(V) x9.3(D)	mm	Note
11	Active Area	408.96(H) x 230.04 (V)	mm	Note
12	Pixel Pitch	213(H) × 213(V)	mm	-
13	Weight	TBD	g	-
14	Driver IC	-	bit	-
15	Light Source	White LED	-	-
16	Interface	LVDS	-	-

3.EXTERNAL DIMENSIONS

RoHS

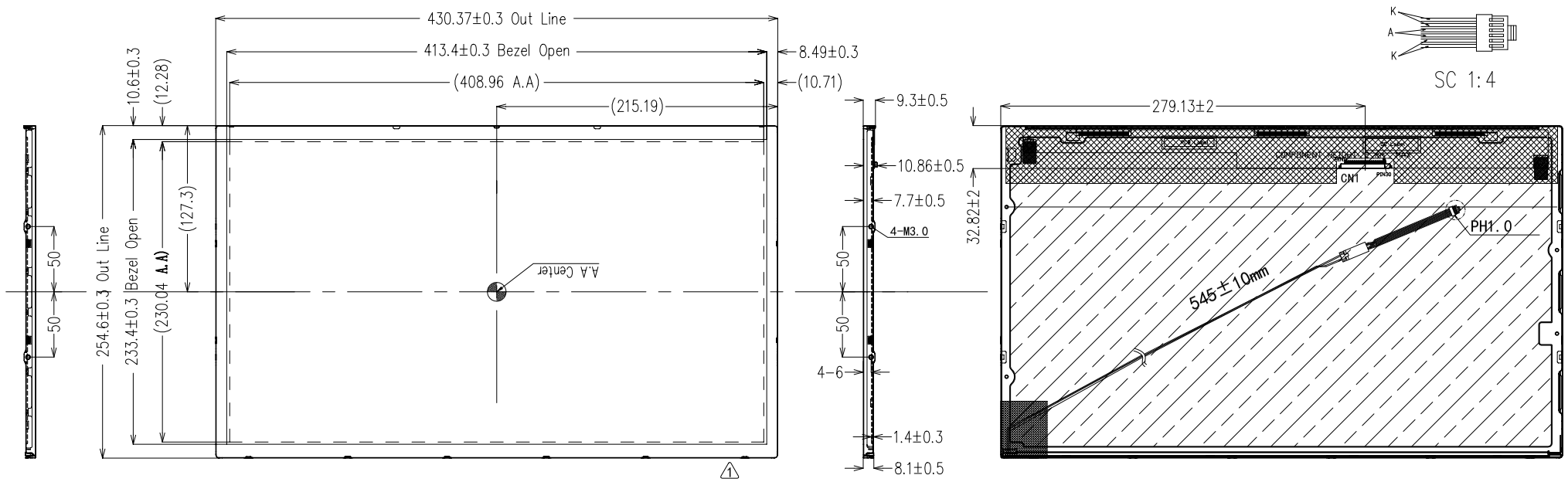

SC 1:4

Notes:

1.Unit:mm
2.Do not scale drawing.
3. ⚠1 Modification rev.number.
4. "*" For important dimension;( ) for reference dimention
5. RoHs must be complied.(Use Lead-free process)

ITEM	SYMBOL	MIN	TYP	MAX	UNIT
Luminous (Without PET)	IV	280	320	--	cd/m²
Chromaticity Coordinatses Without PET	X	(0.275)	(0.315)	(0.355)	
	Y	(0.285)	(0.325)	(0.365)	
Uniformity		70			%
Backlight voltage	VF	36.4	42	47.8	V
Backlight current	IF	--	300		mA

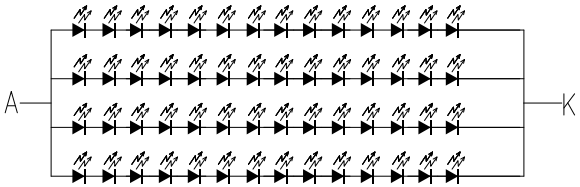

14c*4b=56LED

REV 修改	DATE 日期	DESCRIPTION 修改内容	REVISER 修改者
1	2023.11.21	Drawing indicating OC origin position	
0	2023.9.26	NEW	

DCLATEK

TYPE 类型	LCM	MATERIAL 材料		PAGE 页次	1/1	APPROVED 承认	
MODEL NO. 模组号	100358-01	EDITION 版本号	V1	第三视角		CHECK 核对	
PART NO. 料号		DATE 日期	2023.9.26			DESIGNED 设计者	Cj

4.0 Absolute Maximum Ratings

4.1 Environment Absolute Rating

Parameter	Symbol	Min.	Max.	Unit	Remark
Power Supply Voltage	VDD	VSS-0.3	6.5	V	Ta = 25 ℃
Operating Temperature	T_{OP}	0	+50	℃	
Storage Temperature	T_{SUR}	-20	+60	℃	Note 1
	T_{ST}	-20	+60	℃	
Operating Ambient Humidity	Hop	10	80	%RH	
Storage Humidity	Hst	10	80	%RH	

Note 1 : Temperature and relative humidity range are shown in the figure below.
Wet bulb temperature should be 39 ℃ max. and no condensation of water.

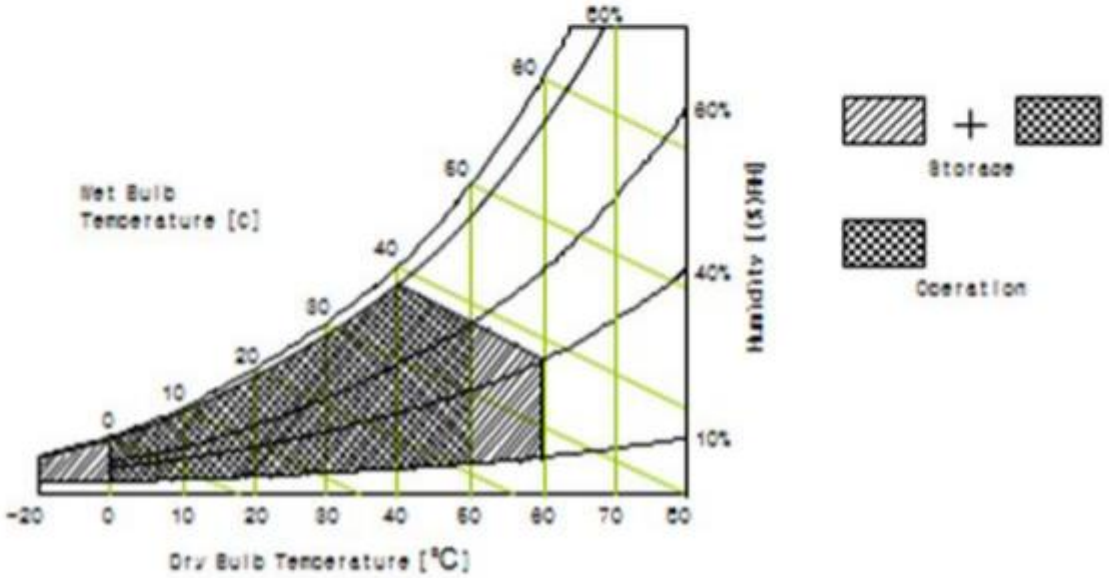

4.2 Back-light Unit:

PARAMETER	Sym.	Min.	Typ.	Max.	Unit	Test Condition	Note
LED Current	IF	–	300	–	mA	–	–
LED Voltage	VF	36.4	42	47.8	V	–	–
Life Time		–	25000	–	Hr.	I≦300mA	–
Brightness		280	320			nits	
Color	White						

Note (1) Permanent damage may occur to the LCD module if beyond this specification. Functional operation should be restricted to the conditions described under normal operating conditions.

(2)Ta=25±2℃

(3)Test condition: LED Current 300 mA

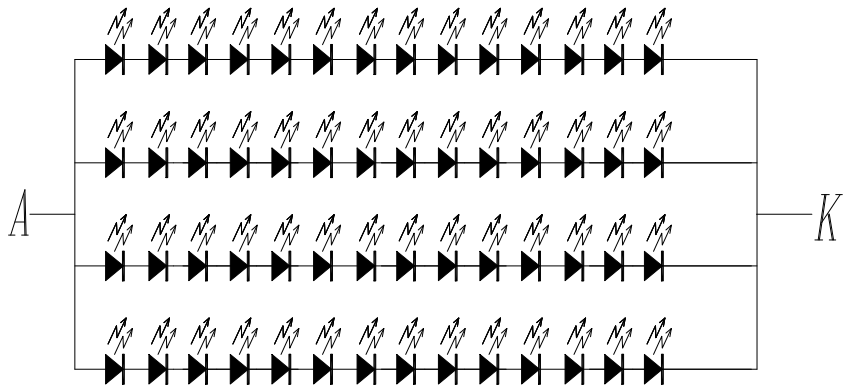

14c*4b=56LED

5.0 Optical Characteristics

Item	Symbol	Condition	Min	Typ	Max	Unit	Remark
Response Time	Tr	θ= 0°	-	-	-	ms	Note 3
	Tf		-	-	-		
	Tr+Tf		-	14	-		
Contrast Ratio	CR	θ= 0°	800	1000	-		Note 2,4
Viewing Angle	Top(12 o'clock)	CR≧10	80	89	-	deg	Note 1
	Bottom(6 o'clock)		80	89	-		
	Left(9 o'clock)		80	89	-		
	Right(3 o'clock)		80	89	-		
Color Chromaticity	Wx	θ= 0°	0.26	0.31	0.36		Note 5
	Wy		0.28	0.33	0.38		
	Rx		-	-	-		
	Ry		-	-	-		
	Gx		-	-	-		
	Gy		-	-	-		
	Bx		-	-	-		
	By		-	-	-		
Cross Talk	Ct		-		4	%	Note 6
Transmittance	Trans		3.4	3.8	-	%	
Luminance	L	θ= 0°	280	320	-	cd/㎡	
Luminance uniformity	YU		75%	-	-	%	

5.1 Measuring Condition

- Measuring surrounding : dark room
- Ambient temperature : 25±2℃
- 30min. warm-up time.

5.2 Measuring Equipment

- TOPCON BM-7
- Measuring spot size : field 2°

Note (1) Definition of Vsat and Vth (at 20℃)

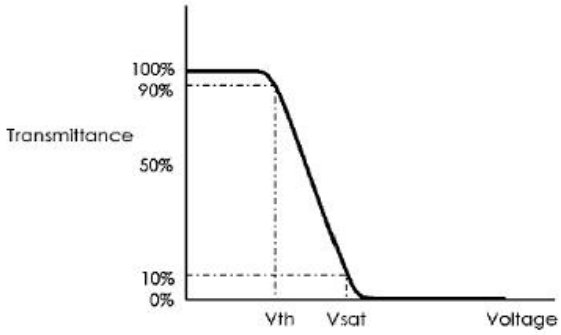

Note (2) Definition of Viewing Angle :

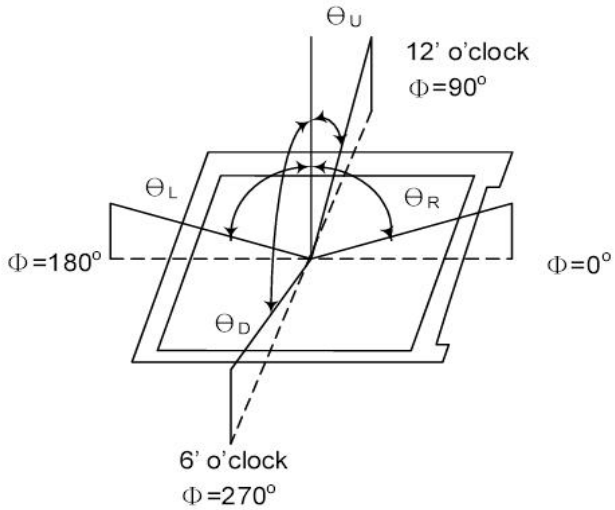

Note (3) Definition of Contrast Ratio(CR) :
measured at the center point of panel

$$CR = \frac{\text{Luminance with all pixels white}}{\text{Luminance with all pixels black}}$$

Note (4) Definition of Response Time : Sum of T_R and T_F

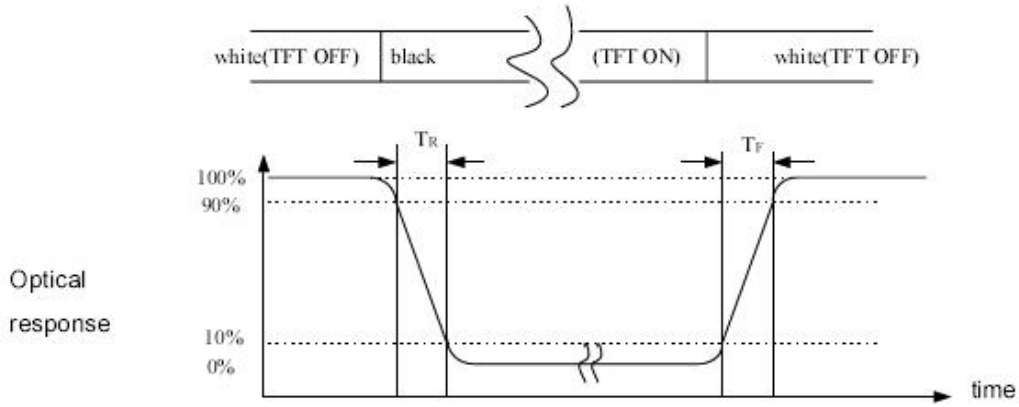

Note (5) Definition of optical measurement setup

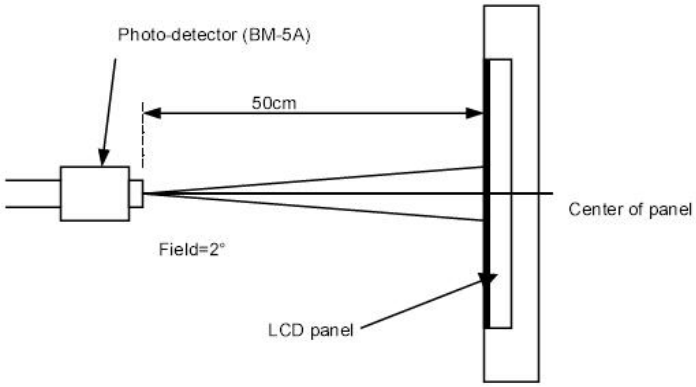

Note (6) Definition of brightness uniformity

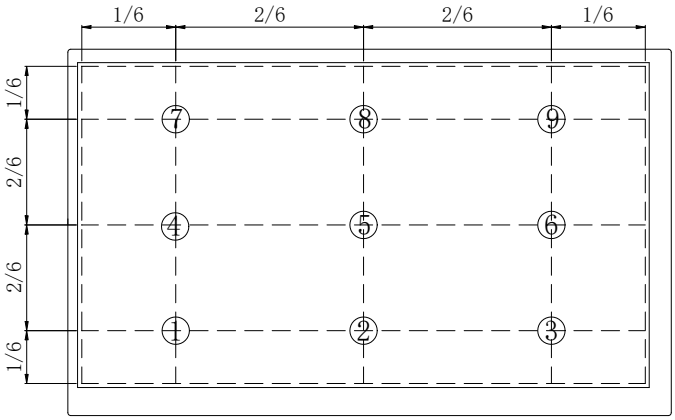

Note (7) Rubbing Direction (The different Rubbing Direction will cause the different optima view direction.

6.Interface Pin Connection

LVDS Connector : IS100-L30R-C23 (UJU) or Equivalent.

Pin No	Symbol	Description	Pin No	Symbol	Description
1	RXO0-	Negative Transmission data of Pixel 0 (ODD)	16	RXE1+	Positive Transmission data of Pixel 1 (EVEN)
2	RXO0+	Positive Transmission data of Pixel 0 (ODD)	17	GNG	Power Ground
3	RXO1-	Negative Transmission data of Pixel 1 (ODD)	18	RXE2-	Negative Transmission data of Pixel 2 (EVEN)
4	RXO1+	Positive Transmission data of Pixel 1 (ODD)	19	RXE2+	Positive Transmission data of Pixel 2 (EVEN)
5	RXO2-	Negative Transmission data of Pixel 2 (ODD)	20	RXEC-	Negative Transmission Cloc k (EVEN)
6	RXO2+	Positive Transmission data of Pixel 2 (ODD)	21	RXEC+	Positive Transmission Clock (EVEN)
7	GND	Power Ground	22	RXE3-	Negative Transmission data of Pixel 3 (EVEN)
8	RXOC-	Negative Transmission Clock (ODD)	23	RXE3+	Positive Transmission data of Pixel 3 (EVEN)
9	RXOC+	Positive Transmission Clock (ODD)	24	GND	Power Ground
10	RXO3-	Negative Transmission data of Pixel 3 (ODD)	25	NC	No. Connection
11	RXO3+	Positive Transmission data of Pixel 3 (ODD)	26	NC	No. Connection
12	RXE0-	Negative Transmission data of Pixel 0 (EVEN)	27	NC	No. Connection
13	RXE0+	Positive Transmission data of Pixel 0 (EVEN)	28	VDD	Power Supply: +5V
14	GND	Power Ground	29	VDD	
15	RXE1-	Negative Transmission data of Pixel 1 (EVEN)	30	VDD	

6.1 LVDS Interface (TX: TFP663P, DP83A or Equivalent)

HIGH QUALITY DISPLAY SOLUTIONS MADE EASY

Channel No.	Data No.	8-bit LVDS Type
		NS
0	Bit-0	R0
	Bit-1	R1
	Bit-2	R2
	Bit-3	R3
	Bit-4	R4
	Bit-5	R5
	Bit-6	G0
1	Bit-0	G1
	Bit-1	G2
	Bit-2	G3
	Bit-3	G4
	Bit-4	G5
	Bit-5	B0
	Bit-6	B1
2	Bit-0	B2
	Bit-1	B3
	Bit-2	B4
	Bit-3	B5
	Bit-4	HS
	Bit-5	VS
	Bit-6	DE
3	Bit-0	R6
	Bit-1	R7
	Bit-2	G6
	Bit-3	G7
	Bit-4	B6
	Bit-5	B7
	Bit-6	-

6.1.1 SIGNAL TIMING SPECIFICATION

6.1.2 Timing Parameters (DE only mode

Item		Symbols		Min	Typ	Max	Unit
Clock	Frequency	1/Tc		60	74.25	78	MHz
	High Time	Tch		-	4/7Tc	-	
	Low Time	Tcl		-	3/7Tc	-	
Frame Period		Tv		1100	1125	1149	lines
				48.5	60	63	Hz
Horizontal Active Display Term		Valid	t_{HV}	-	960	-	t_{CLK}
		Total	t_{HP}	1060	1100	1200	t_{CLK}
Vertical Active Display Term		Valid	t_{VV}	-	1080	-	t_{HP}
		Total	t_{VP}	1100	1125	1149	t_{HP}

Notes: This product is DE only mode. The input of Hsync & Vsync signal does not have an effect on normal operation.

< Table 9. LVDS Input SSCG>

Symbol	Parameter	Condition	Min	Typ	Max	Unit
F	LVDS Input frequency	-	60	74.25	78	MHz
T_{LVSK}	LVDS channel to channel skew	F=100MHz V_{IC}=1.2V V_{ID}=±400mV	-380	-	+380	ps
F_{LVMOD}	Modulating frequency of input cl ock during SSC		60	-	85	KHz
F_{LVDEV}	Maximum deviation of input clock frequency during SSC		-3	-	+3	%
T_{CY-CY}	Cycle to Cycle jitter		-	-	100	ps

6.1.3 LVDS Rx Interface Timing Parameter

The specification of the LVDS Rx interface timing parameter is shown in Table

Item	Symbol	Min	Typ	Max	Unit	Remark
CLKIN Period	tRCIP	12.83	13.47	16.66	nsec	
Input Data 0	tRIP1	-0.42	0.0	+0.42	nsec	
Input Data 1	tRIP0	tRCIP/7-0.42	tRCIP/7	tRCIP/7+0.42	nsec	
Input Data 2	tRIP6	2 ×tRCIP/7-0.42	2 ×tRCIP/7	2 ×tRCIP/7+0.42	nsec	
Input Data 3	tRIP5	3 ×tRCIP/7-0.42	3 ×tRCIP/7	3 ×tRCIP/7+0.42	nsec	
Input Data 4	tRIP4	4 ×tRCIP/7-0.42	4 ×tRCIP/7	4 ×tRCIP/7+0.42	nsec	
Input Data 5	tRIP3	5 ×tRCIP/7-0.42	5 ×tRCIP/7	5 ×tRCIP/7+0.42	nsec	
Input Data 6	tRIP2	6 ×tRCIP/7-0.42	6 ×tRCIP/7	6 ×tRCIP/7+0.42	nsec	

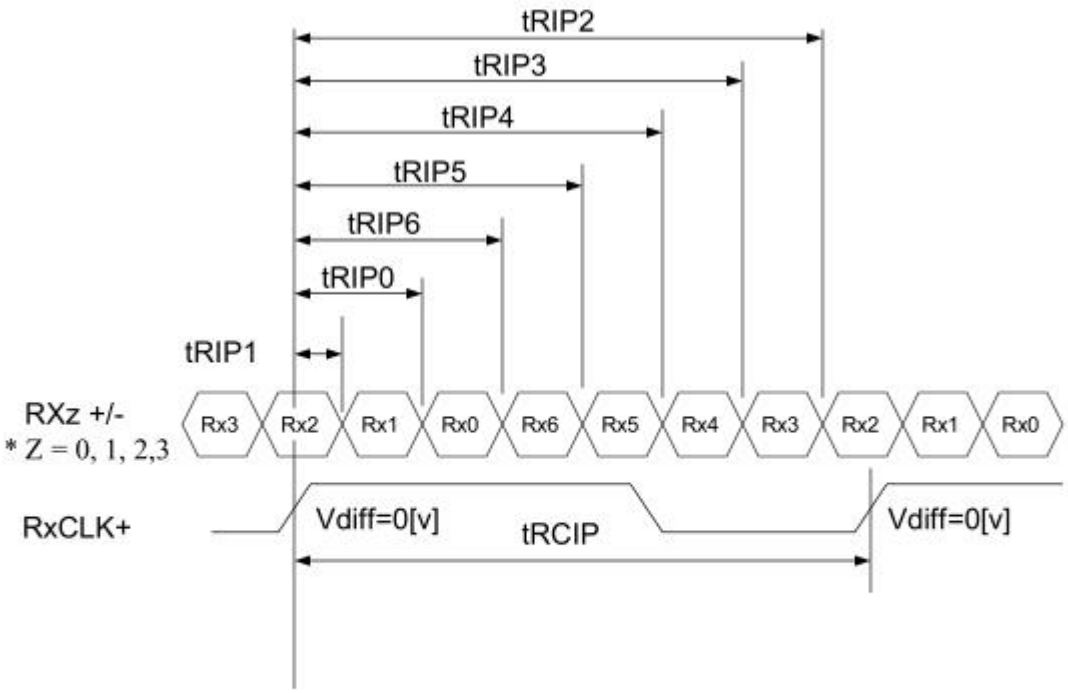

* Vdiff = (RXz+)-(RXz-),…. ,(RXCLK+)-(RXCLK-)

Symbol	Min	Typ	Max	Unit	Note
A	—	150	—	mV	
B	—	150	—	mV	
C	—	0	—	mV	
D	—	-150	—	mV	
E	—	-150	—	mV	
F	—	0	—	mV	

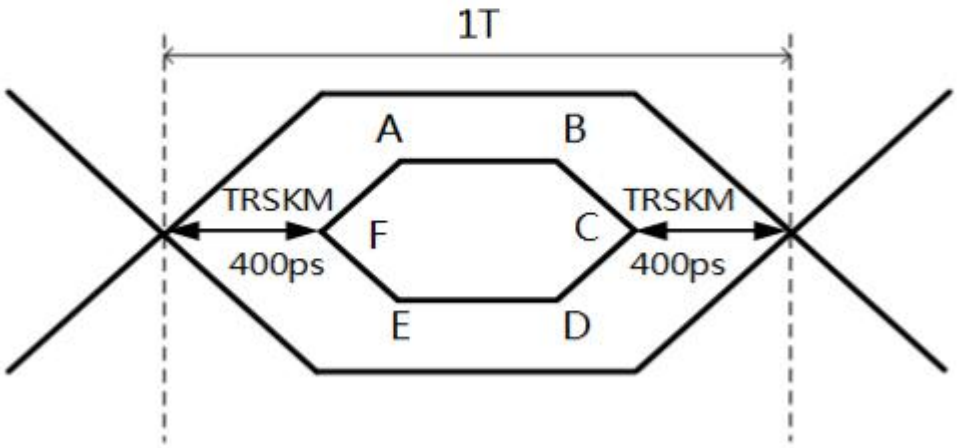

Notes: 1. Time F to A,B to C,C to D,E to F is 150p second.
2. LVDS clock=85Mhz.
3. The time A to B=1T-2*TRSKM-2*150ps.

6.1.4. LVDS Receiver Differential Input

Symbol	Parameter	Min	Typ	Max	Unit	Condition
R_{xVTH}	Differential input high threshold voltage	+0.1			V	RxVCM =1.2V
R_{xVTL}	Differential input low threshold voltage			-0.1	V	
R_{XVIN}	Input voltage range (singled-end)	0		2.4	V	
R_{xVCM}	Differential input common mode voltage	$\lvert V_{ID} \rvert/2$		$2.4-\lvert V_{ID} \rvert/2$	V	
$\lvert V_{ID} \rvert$	Differential input voltage	0.1		0.6	V	

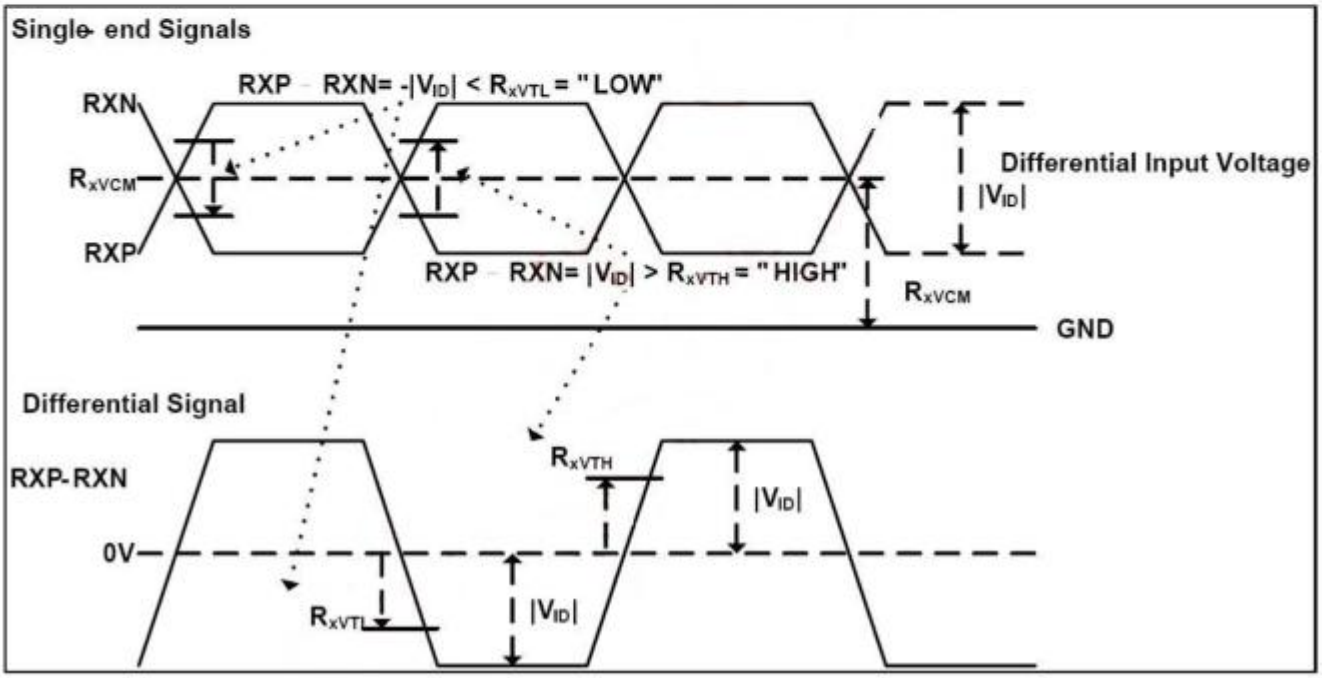

7.0 SIGNAL TIMING WAVEFORMS OF INTERFACE SIGNAL

7.1 Sync Timing Waveforms

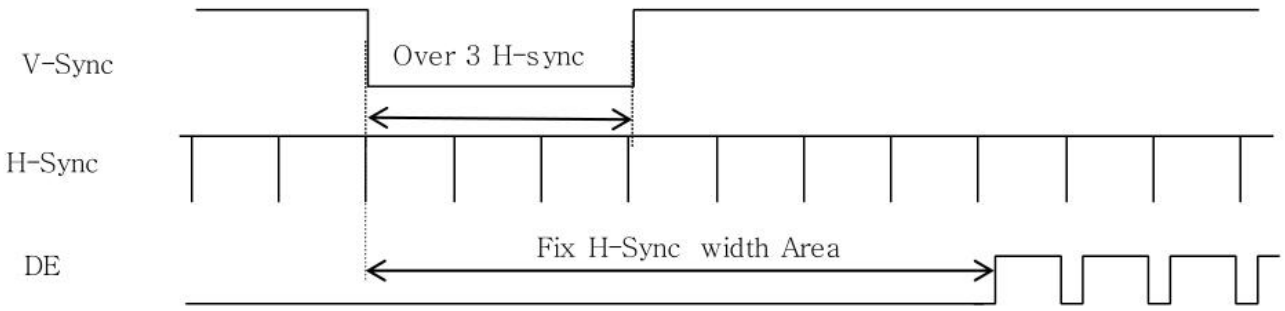

1) Need over 3 H-sync during V-Sync Low
2) Fix H-Sync width from V-Sync falling edge to first rising edge

7.2 Vertical Timing Waveforms

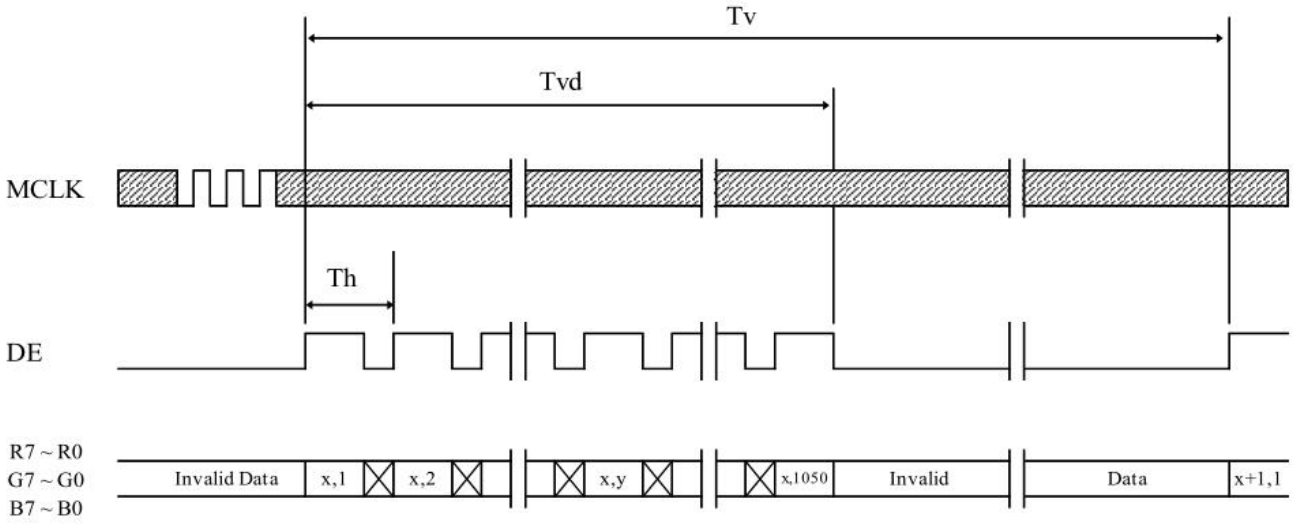

7.3 Horizontal Timing Waveforms

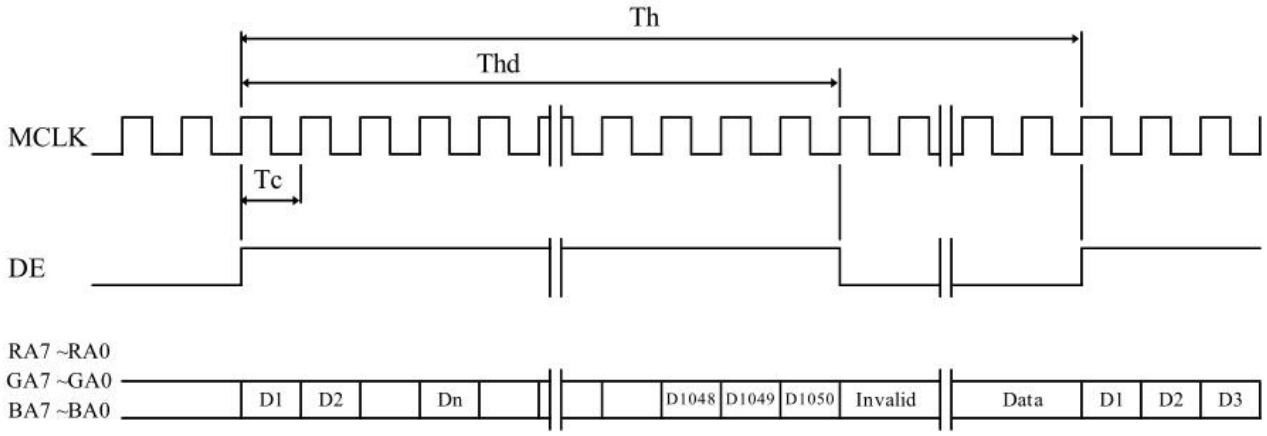

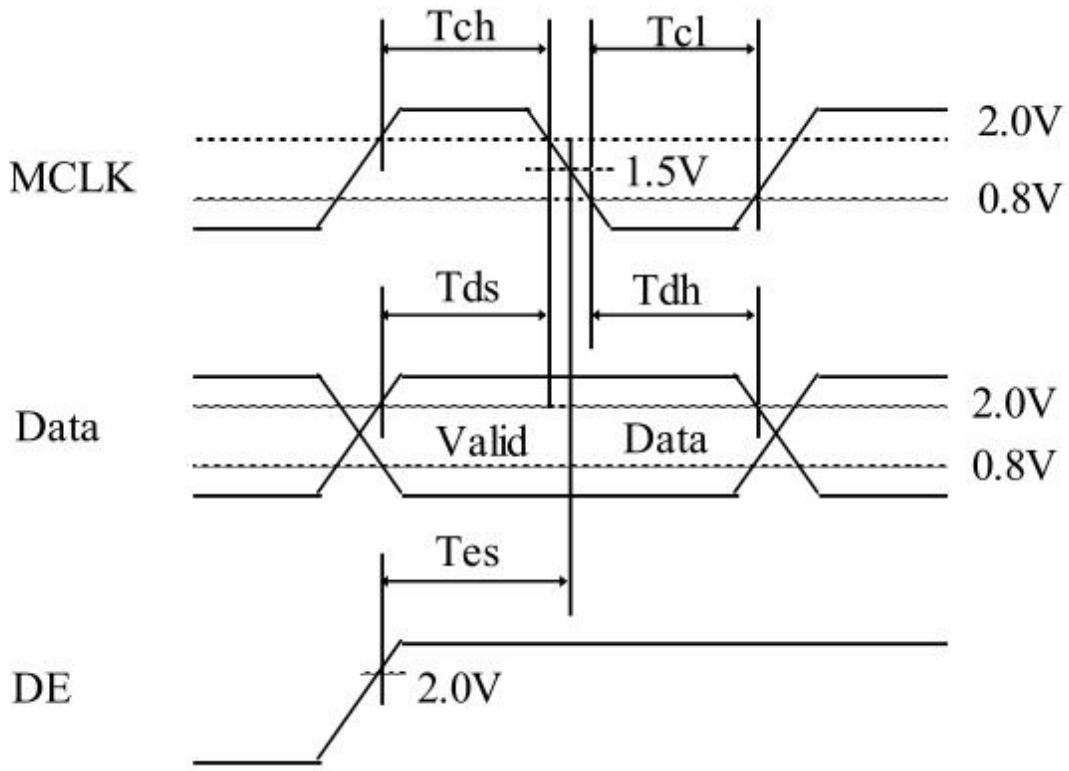

8.0 Power sequence

To prevent a latch-up or DC operation of the Open Cell, the power on/off sequence shall be as shown in below

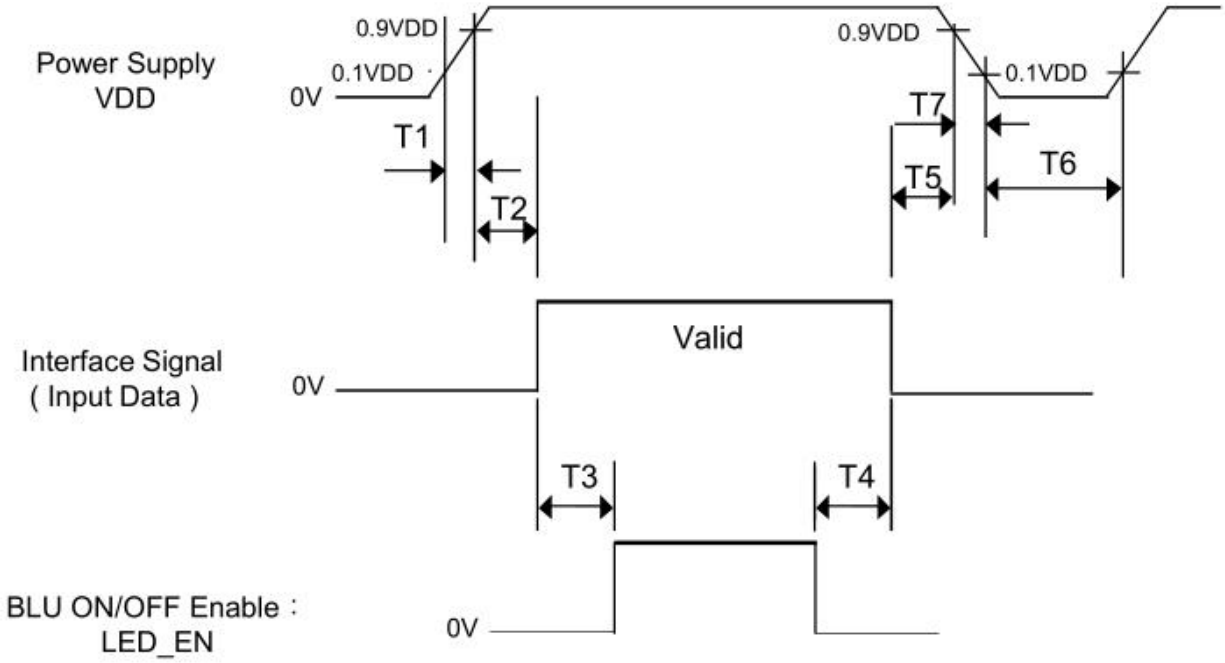

< Table 11. Sequence Table >

Parameter	Values			Units
	Min	Typ	Max	
T1	0.5	-	20	ms
T2	10	-	100	ms
T3	200	-	-	ms
T4	200	-	-	ms
T5	0	-	-	ms
T6	1	-	-	s

Notes: 1. Back Light must be turn on after power for logic and interface signal are valid.
2. Even though T1 is out of SPEC, it is still ok if the inrush current of VDD is below the limit.
3. When VDD<0.9VDD(Typ.),Power off.
4. T7 decreases smoothly, if there were rebounding voltage, it must smaller than 5 volts.

9.0 General Precaution

9.1 Use Restriction

This product is not authorized for use in life supporting systems, aircraft navigation control systems, military systems and any other application where performance failure could be life-threatening or otherwise catastrophic.

9.2 Asembly Precaytton

9.2.1 Please use the mounting hole on the module side in installing and do not bending or wrenching LCD in assembling. And please do not drop, bend or twist LCD module in handling.
9.2.2 Please design display housing in accordance with the following guide lines.
9.2.2.1 Housing case must be destined carefully so as not to put stresses on LCD all sides and not to wrench module. The stresses may cause non-uniformity even if there is no non-uniformity statically.
9.2.2.2 Keep sufficient clearance between LCD module back surface and housing when the LCD module is mounted. The clearance in the design is recommended taking into account the tolerance of LCD module thickness and mounting structure height on the housing.
9.2.3 Please do not push or scratch LCD panel surface with any-thing hard. And do not soil LCD panel surface by touching with bare hands. (Polarizer film, surface of LCD panel is easy to be flawed.)
9.2.4 Please do not press any parts on the rear side such as source IC, gate IC, and FPC during handling LCD module. If pressing rear part is unavoidable, handle the LCD module with care not to damage them.
9.2.5 Please wipe out LCD panel surface with absorbent cotton or soft cloth in case of it being soiled.
9.2.6 Please wipe out drops of adhesives like saliva and water on LCD panel surface immediately. They might damage to cause panel surface variation and color change. 10.2.7 Please do not take a LCD module to pieces and reconstruct it. Resolving and reconstructing modules may cause them not to work well.

9.3 Disassembling or Modification

Do not disassemble or modify the module. It may damage sensitive parts inside LCD module, and may cause scratches or dust on the display. HannStar does not warrant the module, if customers disassemble or modify the module.

9.4 Breakage of LCD Panel

9.4.1 If LCD panel is broken and liquid crystal spills out, do not ingest or inhale liquid crystal, and do not contact liquid crystal with skin.
9.4.2 If liquid crystal contacts mouth or eyes, rinse out with water immediately.
9.4.3 If liquid crystal contacts skin or cloths, wash it off immediately with alcohol and rinse thoroughly with water.
9.4.4 Handle carefully with chips of glass that may cause injury, when the glass is broken.

9.5 Absolute Maximum Ratings and Power Protection Circuit

9.5.1 Do not exceed the absolute maximum rating values, such as the supply voltage variation, input voltage variation, variation in parts' parameters, environmental temperature, etc., otherwise LCD module may be damaged.
9.5.2 Please do not leave LCD module in the environment of high humidity and high temperature for a long time.
9.5.3 It's recommended employing protection circuit for power supply.
9.6 Operation
9.6.1 Do not touch, push or rub the polarizer with anything harder than HB pencil lead.Use fingerstalls of soft gloves in order to keep clean display quality, when persons handle the LCD module for incoming inspection or assembly.
9.6.2 When the surface is dusty, please wipe gently with absorbent cotton or other soft material.
9.6.3 Wipe off saliva or water drops as soon as possible. If saliva or water drops contact with polarizer for a long time, they may causes deformation or color fading.
9.6.4 When cleaning the adhesives, please use absorbent cotton wetted with a little petroleum benzine or other adequate solvent.

9.6 Static Electricity

9.7.1 Protection film must remove very slowly from the surface of LCD module to prevent from electrostatic occurrence.
9.7.2 Because LCD module uses CMOS-IC on TFT-LCD panel, it is very weak to electrostatic discharge. Please be careful with electrostatic discharge.
9.7.3 Persons who handle the module should be grounded through adequate methods.

9.7 Disposal

When disposing LCD module, obey the local environmental regulations.

9.8 OTHERS

9.9.1 A strong incident light into LCD panel might cause display characteristics' changing inferior because of polarizer film, color filter, and other materials becoming inferior. Please do not expose LCD module direct sunlight land strong UV rays.
9.9.2 Please pay attention to a panel side of LCD module not to contact with other materials in preserving it alone.
9.9.3 For the packaging box, please pay attention to the followings:
9.9.3.1 Packaging box and inner case for LCD are designed to protect the LCDs from the damage or scratching during transportation. Please do not open except picking LCDs up from the box.
9.9.3.2 Please do not pile them up more than 6 boxes. (They are not designed so.) And please do not turn over.
9.9.3.3 Please handle packaging box with care not to give them sudden shock and vibrations. And also please do not throw them up.
9.9.3.4 Packing box and inner case for LCDs are made of cardboard. So please pay attention not to get them wet. (Such like keeping them in high humidity or wet place can occur getting them wet.)

10. Packaging

TBD

DCLTEK

深圳市丽台电子有限公司

Quality Inspection Standards

品质允收标准

Model No. / 产品型号: **Applies More than 10.0 Inches Touch Display Screen**
Updated Date /生效日期: **2022-05-20**
Version / 版 本: **A0**
Customer confirmation : _____

Record of Revision /修订履历

Version /版本	Revision Record /修订内容	Reviser /修订人	Revision Date /修订日期
V0	首发 / Starting		2022.05.20

1.Scope of application /适用范围.

This document shall be applied to more than 10.0 inches touch display screen.

本文件适用于5.5~10.0 寸触摸显示屏.

2.Inspection conditions and environment /检验条件与环境.

2. 1 Inspection Conditions /检验条件:

(1) Inspection Distance /检测距离: 35cm ±5cm.

(2) Check time /检验时间：

Displays performance test /功能测试：3~5S /Image，Cosmetic Inspection /外观检验:12~15S.

(3) Check the viewing angle /检验视角:

Light-on Inspection Angle /点灯检验角度： ±45°.

Cosmetic Inspection Angle /外观检验角度：±45°.

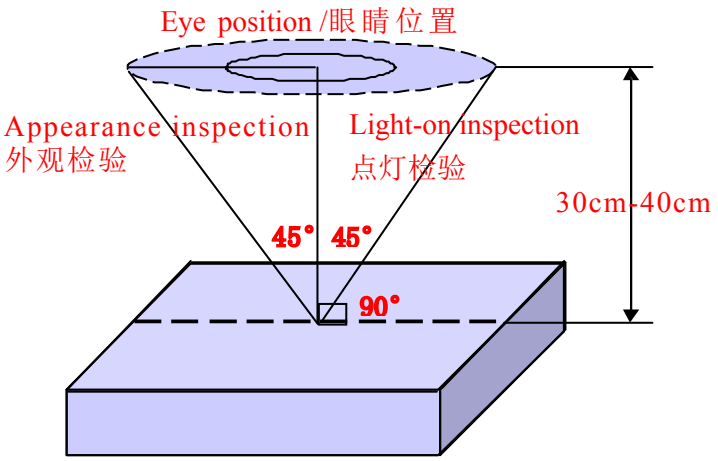

(Perpendicular to LCD panel surface /垂直于LCD表面)

2.2 Inspection environment /检验环境:

Ambient Temperature 温度		25℃±5℃
Ambient Humidity 湿度		55±5%RH
Ambient Illumination 亮度	Cosmetic Inspection 外观检验	800-1000 Lux
	Functional Inspection 点灯检验	200~300Lux

2.3 Sampling Conditions /抽样条件:

（1）Quantity to be inspected /批量：Quantity of shipment lot per model /单次运送单一型号数量.

（2）Sampling method /抽样方法：

Sampling Plan /抽样计划		GB/T 2828.1- 2003
		Normal Inspection ， Single Sampling 正常检验、单次抽样
		General inspection level： Ⅱ 一般检验水平：二级
AQL	Major Defect /主要缺陷	0.65
	Minor Defect /次要缺陷	1.0

（3）The classification of Major(MA) and Minor(MI) defects is shown as “3.1 Classification of defects”.

主缺(MA)及次缺(MI)定义于”3.1缺陷分类”.

3.Terms And Definitions /术语和定义

3.1 Classification of defects / 缺陷分类 :

（1）Major defects /主要缺陷:

A major defect is a defect that is likely to result in failure, or to reduce materially the usability of the product for its intended purpose .

可导致产品功能失效或减少产品可用性的缺陷.

（2）Minor defects /次要缺陷:

It will not cause the product to fail and reduce the defects in the effective use and operation of the product.

不会导致产品功能失效和减少产品的有效使用与操作的缺陷.

3.2 Point defects /点状缺陷：

The size of the point defect is defined by the diameter D, and the average diameter of the defect is D=1/2（W+L）.

点状缺陷的大小是由直径 D 定义的，缺陷的平均直径 D=1/2(W+L).

3.3 Linear defects /线状缺陷：

When defect size L≥2W,the defect count as liner type defect.Size of linear defect is defined by length (L) and the maximum width (W).

当缺陷尺寸 L≥2W 时，被视为线状缺陷，线状缺陷是由长度 (L) 和最大宽度 (W) 定义的.

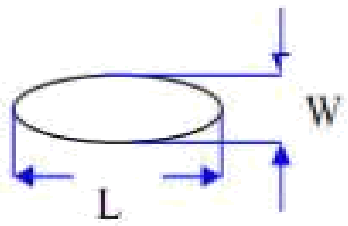

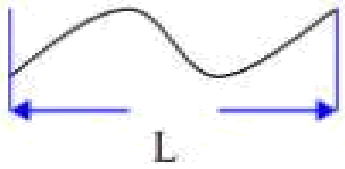

3.4 LCD sub-pixel dot /LCD子像素点

（1）Definition /定义 ： The point defect area is greater than 50% of the LCD sub-pixel area, and is visible through ND5% filter masking .

子像素点缺陷面积大于 50% LCD子像素面积, 且透过 ND5%遮盖是可见的.

（2）The drawing of 1/2 area sub-pixel definition / 1/2 面积的子像素定义绘图:

The 1/2 area sub-pixel can be defined as below one or more of specific shapes

1/2 面积的子像素可以定义为如下一个或多个特定形状图：

3.5 Small bright dot /细碎亮点 ：

Point defects smaller than "LCD sub-pixels" /小于“LCD子像素点”的点缺陷.

（Ratio of Zone I to Zone O /I 区与 O 区比例：1：2：1）

3.6 ND filter inspection method /ND卡的检验方法：

Hold the ND filter about 5cm above the display area, with your eyes 30-40cm away from the panel, and observe for 2~3 seconds.

在显示区域上方大约 5cm 处握住 ND 卡，眼睛距离面板 30-40cm，观察2~3 秒.

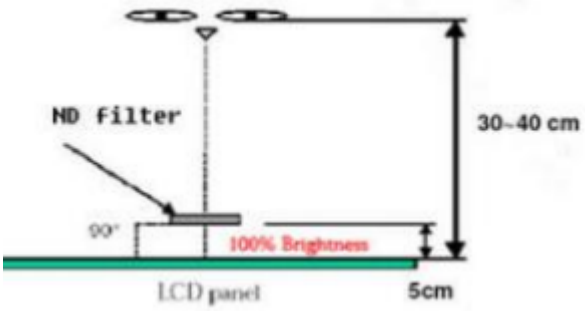

3.7 Any FPC surface problems that do not leak copper on the surface and do not cause functional failure are acceptable.
任何 FPC 表面问题，表面未露铜和不造成功能失效是可以接受.

3.8 Extraneous substances that can be wiped out ， like Finger point,Particles are not considered as a defect .
可以被擦拭干净的表面物质不视为缺陷 (如手指印，尘粒) .

3.9 Defects that can be covered by the material and are not visible in appearance are not considered defects.

能被物料覆盖，外观不可见的缺陷不视为缺陷.

3.10 Panel damage /面板损伤：

Glass damage outside the AA display area that does not affect the effective wiring is acceptable.

AA 显示区域以外的玻璃损伤，不影响有效线路是可以接受的.

3.11 Issues not specified or defined in this acceptance standard shall be handled through friendly negotiation between the two parties.

本允收标准中未规定或定义的问题，双方友好协商处理.

4. Inspection standards /检验标准

4.1 Structural Dimensions /结构尺寸规格

Serial Number 序号	Measurement items /测量项目		Specification /规格	Remark /备注
	名称 /Name	Unit /单位	Tolerance /公差	
1	Outside dimension：Length 尺寸：长	mm /毫米	0.15mm~0.30mm	Please refer to the product specification for detailed dimensions and tolerances 详细的尺寸规格和公差请参考产品规格书
2	Outside dimension：Width 尺寸：宽	mm /毫米	0.15mm~0.30mm	
3	Outside dimension：Thickness 尺寸：高	mm /毫米	0.30mm~0.50mm	

4.2 Appearance Inspection Specification /外观检验规格

(D： diameter, W： width, L： length, N： quantity, DS： spacing)

Inspection area 检验区域	Inspection items 检验项目	Inspection specifications 检验规格	Defect category 缺陷类别	
Glass 玻璃	Wire(on Array) 线路	Can't be damaged 不能损伤	MA	
	Chipping/corner breaking 崩边/破角	Can't affect the effective lines and functions 不能影响有效线路和功能	MA	
	Edge 边缘	There must be no extensional cracks 不可有延伸性裂纹	MA	
Silicone 硅胶	Silicone coating 硅胶涂布	The height must not exceed the LCD CF surface 高度不能超过LCD CF面		MI
	Glue overflow 溢胶	Can't cover FPC, POL, etc 不能覆盖到FPC、POL等		MI

Inspection area 检验区域	Inspection items 检验项目	Inspection specifications 检验规格	Defect category 缺陷类别	
PCBA FPC Connector 连接器	Appearance 外观	Scratches or injuries are not allowed to cause copper exposure 划伤或损伤不允许表面出现露铜		MI
	Component 元器件	Can't be damaged and lack 不能损伤和缺少	MA	
	Goldfinger oxidation 金手指氧化	Not allowed 不允许		MI
	Connection status 连接状况	The connection must be accurate and stable 必须准确稳定连接	MA	
	Break 破裂	Not allowed 不允许	MA	
	Soldering,: false soldering/tinning/tin beads 假焊/连锡/锡珠	Not allowed 不允许	MA	
POL 偏光片	Scratches 划伤	1. W≤0.10mm；L≤5mm，Ignore（忽略） 2. 0.10mm<W≤0.15mm ; L≤5mm ; N≤5 ; DS ≥10mm 3. 0.15mm＜W；5mm＜ L， Not allowable（不允许）		MI
	Dent 凹凸印	1. D≤0.25mm，Ignore（忽略） 2. 0.25mm＜D≤0.50mm；N≤5；DS≥10mm 3. 0.50mm＜D，Not allowable（不允许）		MI
	Bubbles 气泡	1. D≤0.25mm，Ignore（忽略） 2. 0.25mm＜D≤0.50mm；N≤5；DS≥10mm 3. 0.50mm＜D，Not allowable（不允许）		MI
	Point defects 点状不良	1. D≤0.25mm，Ignore（忽略） 2. 0.25mm＜D≤0.50mm；N≤5；DS≥10mm 3. 0.50mm＜D，Not allowable（不允许）		MI
	Edge bubbles 边缘气泡	1. Within 1/2BM of the display area, it is not allowed 显示区往外 1/2BM 区域内，不允许 2. The display area is 1/2 outside the BM area, and it is not controlled 显示区往外1/2BM区域以外，不管控		MI
	Dirty/watermarked 脏污/水印	No dirt/water lines/finger marks are allowed, and must be wiped clean 不允许有脏污/水印/手指印，须擦拭干净方可		MI
	Warping 起翘	Not allowed 不允许		MI
	Attaching offset 贴偏	It is necessary to completely cover the display area outward, within the 1/2BM area, or without leaking POL edges after TP is attached 需完整覆盖显示区往外、1/2BM区以内或贴合TP后不会出现漏偏光片边缘		MI
	Mixture 混料	Mixing different types of POL or not using POL as required by the BOM，not allowed 不允许混贴不同型号的POL或未按BOM要求使用POL	MA	

Inspection area 检验区域	Inspection items 检验项目	Inspection specifications 检验规格	Defect category 缺陷类别	
TP&CG	Point defects 点状不良	1. D≤0.25mm，Ignore（忽略） 2. 0.25mm＜D≤0.50mm；N≤5；DS≥10mm 3. 0.50mm＜D，Not allowable（不允许）		MI
	Scratches 划伤	1. W≤0.10mm；L≤5mm，Ignore（忽略） 2. 0.10mm<W≤0.15mm ; L≤5mm ; N≤5 ; DS ≥10mm 3. 0.15mm＜W；5mm＜ L， Not allowable（不允许） 4. There is a feeling scratch，Not allowable 有感划伤，不允许		MI
	Edges and corners cracked 崩角/崩边	1. Product front /产品正面： Edge and corner chipping is not allowed 崩角、崩边不允许 2. Product back /产品背面: X≤ 0.5 , Y≤0.5，Z≤1/2T；N≤5；DS≥10mm		MI
	Silk screen 丝印	The silk screen is clear, complete and correct 丝印清晰、完整、内容正确		MI
	Dirty 脏污	Non-wipeable dirt, not allowed 不可擦拭的脏污，不允许		MI
	Broken 破损	Not allowable 不允许	MA	
	Ink color aberration 油墨色差	ΔE>1，Not allowable（不允许）		MI
	Cover pinholes 针孔	1. D≤0.20mm , N≤5 , DS≥10mm，allowable 2. D＞0.20mm，intensive pinholes（密集型针孔），Not allowable（不允许）		MI
	IR holes IR孔	Dirt, deviation, color difference, etc. are not allowed 不允许脏污、偏位、色差等		MI
BL 背光	Backlight separation 背光分离	Not allowable 不允许		MI
	Deformation of rubber iron and rubber frame 胶铁、胶框变形	Use the plug gauge 0.3mm on the flat surface and can snap in and judge NG 在平面上使用塞规0.3mm卡翘曲位置，能卡进判定NG		MI
	The iron frame is oxidized and not tightened 铁框氧化、卡不紧	Not allowable 不允许		MI
	Backlight sticky solder beads, glue, etc 背面粘锡珠、残胶等	Not allowable 不允许		MI
	Lnkjet coding，Barcode， QR code 喷码/条码/二维码	The lnkjet coding is clear and complete, the barcode and QR code can be scanned normally, and the content and format match 喷码清晰完整、条码和二维码可正常扫描，内容和格式相符		MI
	Accessories (protective film, double-sided tape, insulating adhesive, etc.) 辅料（保护膜、双面胶、绝缘胶等）	Defects such as missing pastes, sticking deviations, defects, and fractures are not allowed 不允许有漏贴、贴偏、残缺、断裂等缺陷		MI

4.3 Electrical test specifications /电性检查规格
(D： diameter, W： width, L： length, N： quantity, DS： spacing)

Inspection items 检验项目	Inspection specifications 检验规格	Defect category 缺陷类别	
Glass bright spots/dark spots 玻璃亮点/暗点	1. D≤0.25mm，Ignore（忽略） 2. 0.25mm＜D≤0.50mm；N≤5；DS≥10mm 3. 0.50mm＜D，Not allowable（不允许）		MI
Mura	Use ND5% filter masking, visual invisibility is OK, 200~300Lux 使用ND5%遮盖，目视不可见即为OK，200~300Lux		MI
Small bright dot 细碎亮点	Use ND5% filter masking, visual invisibility is OK 使用ND5%遮盖，目视不可见即为OK		MI
Light leakage 漏光	1. Use ND5% filter masking, visual invisibility is OK 使用ND5%遮盖，目视不可见即为OK 2. If necessary, sign off on the sample 必要时，签限定样		MI
Backlight black/white dots 背光黑点/白点	1. D≤0.25mm，Ignore（忽略） 2. 0.25mm＜D≤0.50mm；N≤5；DS≥10mm 3. 0.50mm＜D，Not allowable（不允许）		MI
Linear foreign bodies 线状异物（异物毛丝等）	1. W≤0.10mm；L≤5mm，Ignore（忽略） 2. 0.10mm<W≤0.15mm ; L≤5mm ; N≤5 ; DS≥10mm 3. 0.15mm＜W；5mm＜ L，Not allowable（不允许）		MI
Black/White Print 黑印/白印	Use ND5% filter masking, visual invisibility is OK 使用ND5%遮盖，目视不可见即为OK		MI
The display is uneven 显示不均匀	Use ND5% filter masking, visual invisibility is OK 使用ND5%遮盖，目视不可见即为OK		MI
The brightness is uneven 亮度不均匀	Brightness uniformity＜85.0%，Not allowable 亮度均匀性＜85.0%，不允许		MI
Displacement of the membrane 膜材移位	Not allowable 不允许		MI
Interference pattern/Newtonian pattern 干涉纹/牛顿纹	Not allowable 不允许		MI
Display abnormal 显示异常	Not allowable 不允许	MA	
No display 无显示	Not allowable 不允许	MA	
Line/Missing Drawing 线条/缺画	Not allowable 不允许	MA	
Splash screen 闪屏	Not allowable 不允许	MA	
LCD grid LCD网格	Not allowable 不允许	MA	
Afterimage 残影	Not allowable 不允许	MA	
Wrong viewing angle 视角错误	Not allowable 不允许	MA	
No touch 无触摸	Not allowable 不允许	MA	
Touch the jump point 触摸跳点	Not allowable 不允许	MA	
Not sensitive 触摸不灵敏	Not allowable 不允许	MA	