Request information

PRODUCT SPECIFICATION

TFT-LCD MODULE

Module No: 100347-01

☑ Preliminary Specification

☐ Approval Specification

Designed by	Checked by	Approved by

Final Approval by Customer

Approved by	Comment

For more information, contact us:

WWW.DCLTEK.COM | 1-800-407-8917 | SALES@DCLTEK.COM

※The specification of “TBD” should refer to the measured value of sample . If there is difference between the design specification and measured value, we naturally shall negotiate and agree to solution with customer.

This document contains confidential and proprietary information of DCL Technologies, Inc. It is provided solely for the recipient's evaluation and may not be reproduced, disclosed, or distributed, in whole or in part, without the prior written consent of DCL Technologies, Inc.

1.Document Revision History

Version	Contents	Date	Note
V0	Original	2021.12.06	

1.GENERAL INFORMATION

ITEM	STANDARD VALUES	UNITS
LCD Size	10.1”TFT	--
Panel Type	IPS	pixels
Resolution	1920(H)×1200(V)	--
Display mode	Normally Black	--
Viewing Direction	ALL	--
LCM Outline Dimension	229.46(W)×149.10(H)×4.40(T)	mm
Active area	216.81(W)×135.50(H)	mm
Dot pitch	0.11292(H)×RGB×0.11291(V)	--
Display Colors	16.7M(8bit)	--
TFT Driver IC	TBD	mm
Interface	LVDS	--
Operating temperature	-20 ~ +70	℃
Storage temperature	-30 ~ +80	℃
Back Light	36pcs White LED 6S6P	--
Weight	TBD	g

1.1 Introduction

100347-01 is a color active matrix TFT LCM using amorphous silicon TFT's (Thin Film Transistors) as an active switching devices. This module has a 10.1 inch diagonally measured active area with WUXGA resolutions (1920 horizontal by 1200 vertical pixel array). Each pixel is divided into RED, GREEN, BLUE dots which are arranged in vertical stripe and this module can display 16.7M colors.

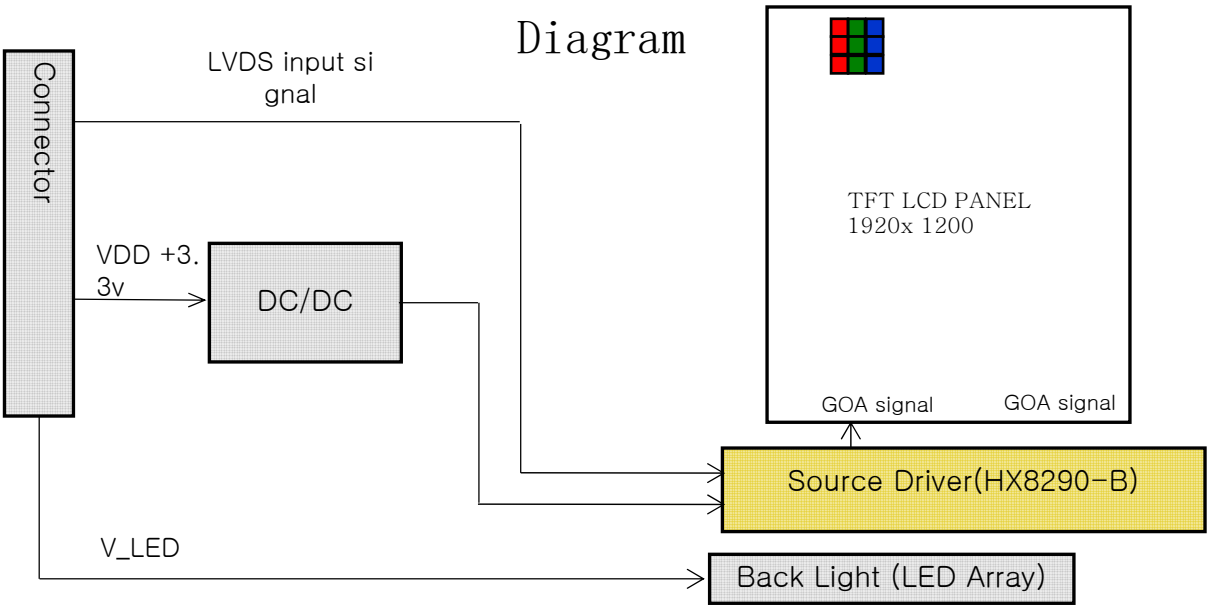

2.0 ABSOLUTE MAXIMUM RATINGS

The followings are maximum values which, if exceed, may cause faulty operation or damage to the unit.

< Table 2. Absolute Maximum Ratings>

Parameter		Symbol	Min.	Max.	Unit	Remarks
Power Supply	LCD Module	VDD	VSS-0.3	3.6	V	Ta = 25 ℃
Operating Temperature		T_{OP}	-20	+70	℃	
Storage Temperature		T_{ST}	-30	+80	℃	
Operating Ambient Humidity		Hop	20	90	%RH	
Storage Humidity		Hst	10	90	%RH	

3.0 ELECTRICAL SPECIFICATIONS

3.1 TFT LCD Module

< Table 3. LCD Module Electrical specifications > [Ta =25±2 ℃]

Parameter		Symbol	Values			Unit	Notes
			Min.	Typ.	Max.		
Power Supply Voltage		VDD	3.0	3.3	3.6	V	
		VRP			300	mV	Ripple
Power Supply Current		IDD	-	300	360	mA	Note 1
Power Consumption		PLCD	-	1	1.2	W	
Rush current		IRUSH	-	-	3.0	A	Note 2
CMOS Interface	Input Voltage	VIH	2.7		3.3	V	
		VIL	0		0.5	V	
	Output Voltage	VOH	2.7		3.3	V	
		VOL	0		0.5	V	

Notes : 1. The supply voltage is measured and specified at the interface connector of LCM.
The current draw and power consumption specified is for VDD=3.3V, Frame rate f_V=60Hz and Clock frequency = 80MHz. Test Pattern of power supply current

a) Typ : Mosaic 8 x 6 Pattern(L0/L255)

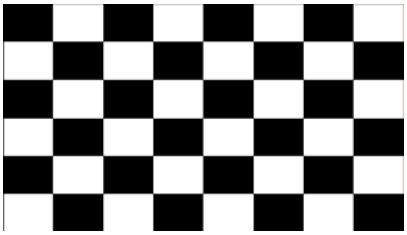

b) Max : skip subPixel(L255)

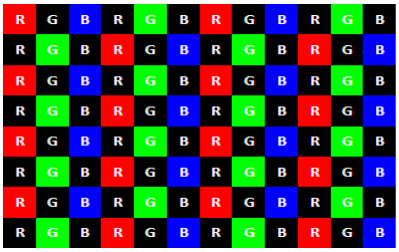

2. The duration of rush current is about 2ms and rising time of Power Input is 1ms(min)

3.2 INPUT TERMINAL PIN ASSIGNMENT

This LCD employs one interface connections, a 45 pin connector is used for the LCD module electronics interface.

3.2.1 Pin assignment for LCD module

Connector : FH34SRJ-45S-0.5SH(50) (HRS) or equivalent

< Table4. Pin Assignment for LCD Module Connector >

Pin No.	Symbol	Description	I/O
1	K-	Backlit cathode	-
2	K-	Backlit cathode	-
3	A+	Backlit anode	-
4	A+	Backlit anode	-
5	NC	NC	-
6	GND	GROUND	P
7	ELV3P	EVEN LVDS Positive data signal (+)	I
8	ELV3N	EVEN LVDS Negative data signal (-)	I
9	GND	GROUND	P
10	ELV2P	EVEN LVDS Positive data signal (+)	I
11	ELV2N	EVEN LVDS Negative data signal (-)	I
12	GND	GROUND	P
13	ELVCLKP	EVEN LVDS Positive CLK signal (+)	I
14	ELVCLKN	EVEN LVDS Negative CLK signal (-)	I
15	GND	GROUND	P
16	ELV1P	EVEN LVDS Positive data signal (+)	I
17	ELV1N	EVEN LVDS Negative data signal (-)	I
18	GND	GROUND	P
19	ELV0P	EVEN LVDS Positive data signal (+)	I
20	ELV0N	EVEN LVDS Negative data signal (-)	I

Pin No.	Symbol	Description	I/O
21	GND	GROUND	P
22	OLV3P	Odd LVDS Positive data signal (+)	I
23	OLV3N	Odd LVDS Negative data signal (-)	I
24	GND	GROUND	P
25	OLV2P	Odd LVDS Positive data signal (+)	I
26	OLV2N	Odd LVDS Negative data signal (-)	I
27	GND	GROUND	P
28	OLVCLKP	Odd LVDS Positive CLK signal (+)	I
29	OLVCLKN	Odd LVDS Negative CLK signal (-)	I
30	GND	GROUND	P
31	OLV1P	Odd LVDS Positive data signal (+)	I
32	OLV1N	Odd LVDS Negative data signal (-)	I
33	GND	GROUND	P
34	OLV0P	Odd LVDS Positive data signal (+)	I
35	OLV0N	Odd LVDS Negative data signal (-)	I
36	GND	GROUND	P
37	I2C _SDA	Reserved for LCD manufacturer' s use , not connection	I
38	I2C _SCL		I
39	VDD_OTP		P
40	EEPEN	Not Connection	I
41	VDDIN	Power supply VDDIN=3.3V (Typ.)	P
42	VDDIN		P
43	VDDIN		P
44	VDDIN		P
45	VDDIN		P

3.3 Interface timing Parameter and AC/DC Parameter

< Table5. LVDS Timing Parameter >

Parameter	Symbol	Value			Unit
		Min.	Typ.	Max.	
DCLK Frequency	Fdclk	74.5	77.56	85	MHz
Horizontal display area	Thd		1920		DCLK
HSYNC period time	Th	1910	1920	1960	DCLK
Horizontal Blank	THB	29	80	288	DCLK
HSYNC pulse width	Thp	2	10	255	DCLK
HSYNC back porch	thbp	3	6	255	DCLK
HSYNC Front porch	thfp	24	64	260	DCLK
Vertical display area	Tvd		1200		H
VSYNC period time	Tv	1243	1243	1560	H
Vertical Blank	TVB	43	43	360	H
VSYNC Pluse width	Tvp	4	4	20	H
VSYNC back porch	Tvbp	20	20	255	H
VSYNC front porch	Tvfp	19	19	260	H
Frequency	fV	-	60	-	Hz

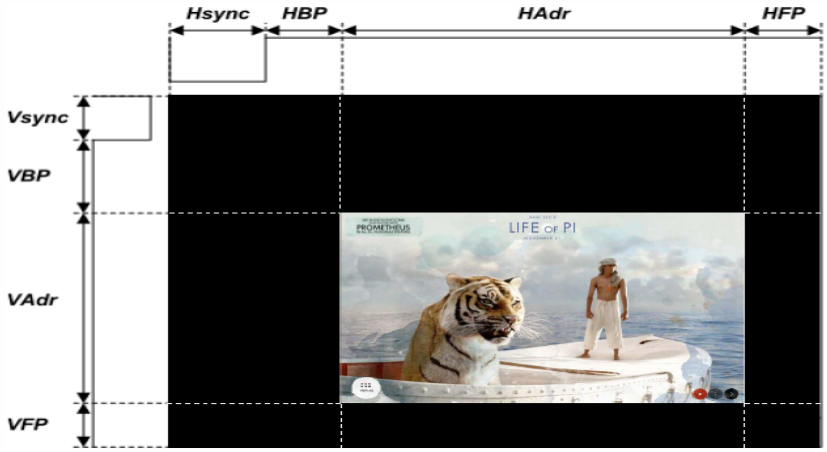

3.4 LVDS mode AC electrical characteristics

Parameter	Symbol	Spec.			Unit
		Min.	Typ.	Max.	
Clock frequency	F_{LVCYC}	20		85	MHz
Clock period	T_{LVCYC}	11.76			nsec
1 data bit time	UI		1/7		T_{LVCYC}
Clock high time	T_{LVCH}		4		UI
Clock low time	T_{LVCL}		3		UI
Position 1	T_{POS1}	-0.2	0	0.2	UI
Position 0	T_{POS0}	0.8	1	1.2	UI
Position 6	T_{POS6}	1.8	2	2.2	UI
Position 5	T_{POS5}	2.8	3	3.2	UI
Position 4	T_{POS4}	3.8	4	4.2	UI
Position 3	T_{POS3}	4.8	5	5.2	UI
Position 2	T_{POS2}	5.8	6	6.2	UI
Input eye width	T_{EYEW}	0.6	-	-	UI
Input eye border	T_{EX}	-	-	0.2	UI
LVDS wake up time	T_{ENLVDS}	-	-	150	μs

Table 1.1: LVDS mode AC electrical characteristics

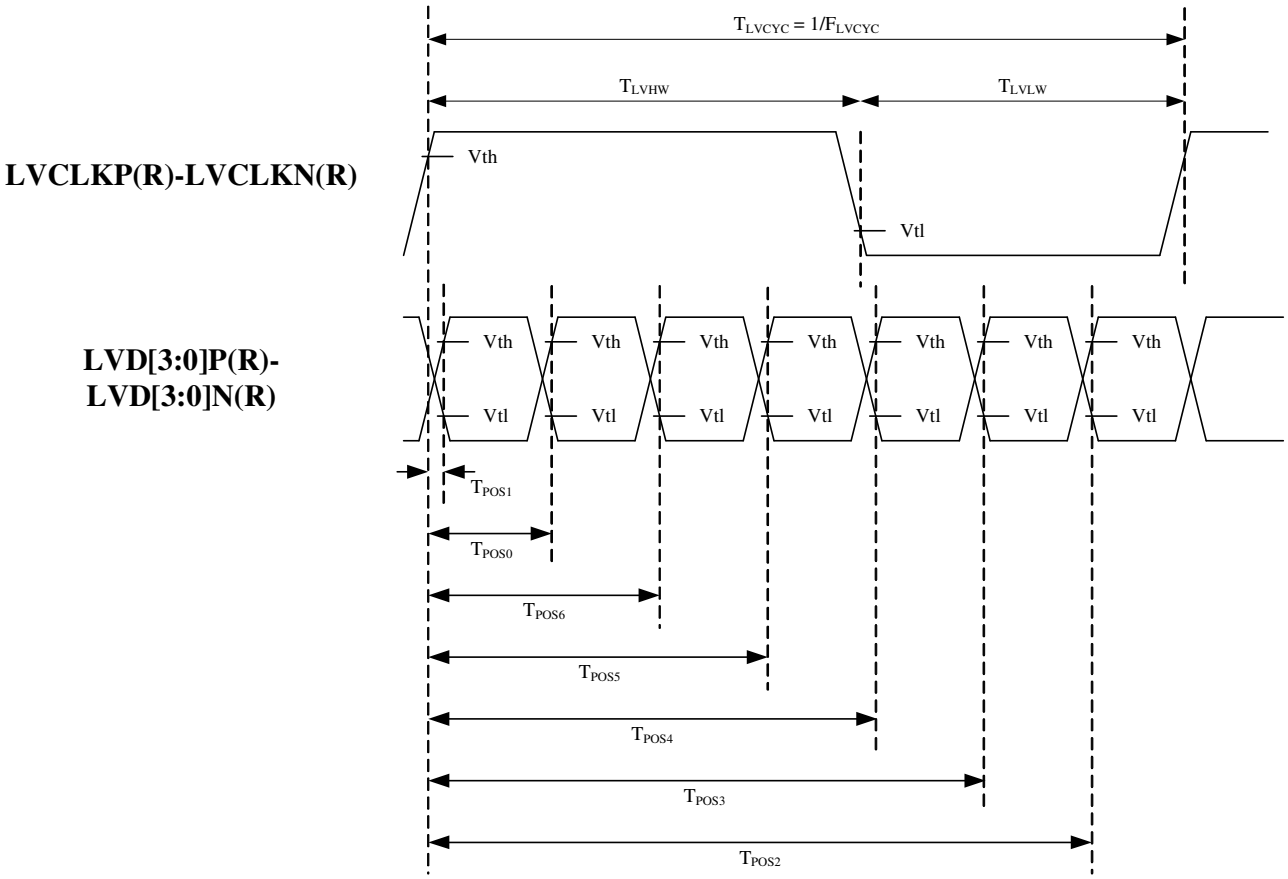

Figure 1.2: LVDS input timing

Single-ended:
LVD[3:0]P,
LVD[3:0]N

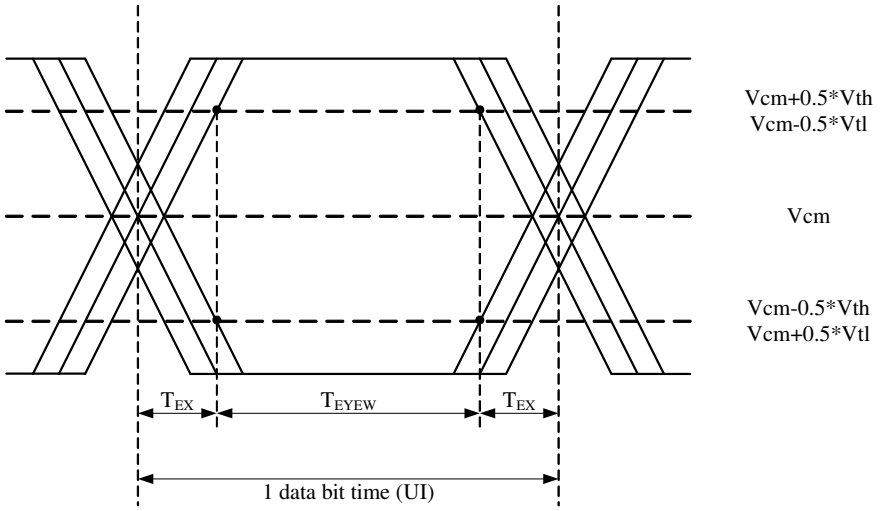

Differential:
LVD[3:0]P-LVD[3:0]N

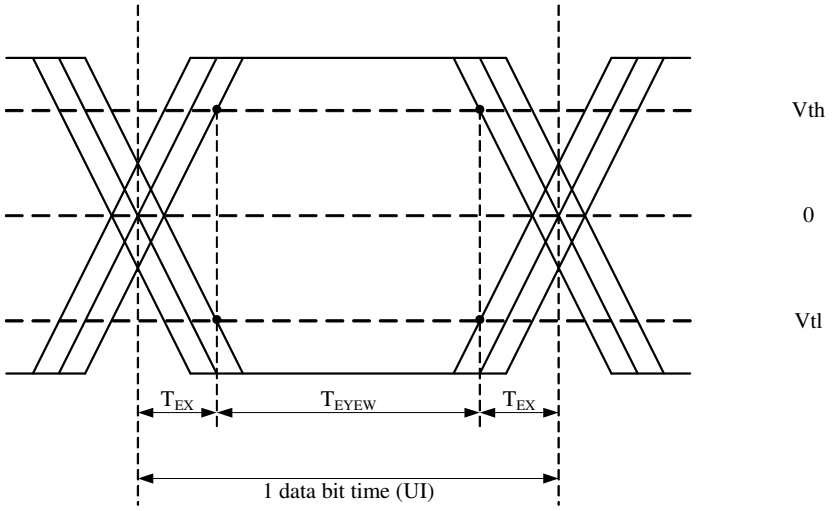

Figure 1.3: LVDS input eye diagram

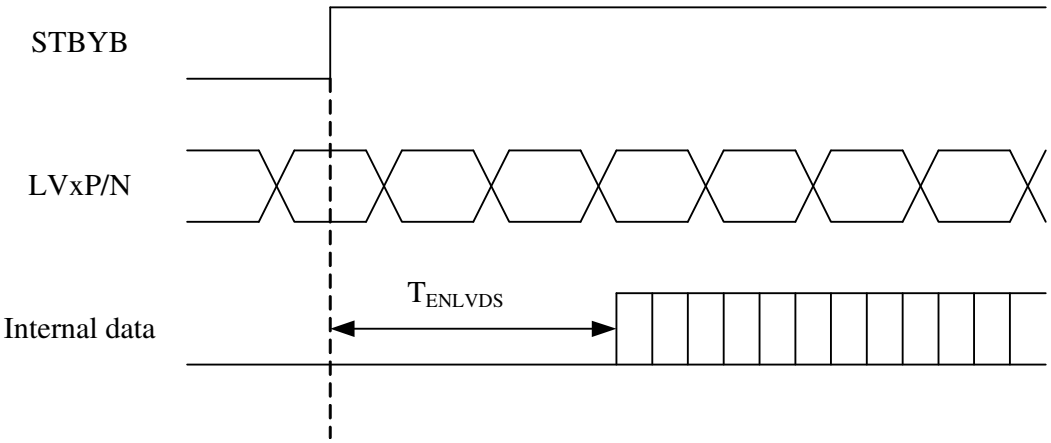

Figure 1.4: LVDS wake up time

3.5 Reset timing

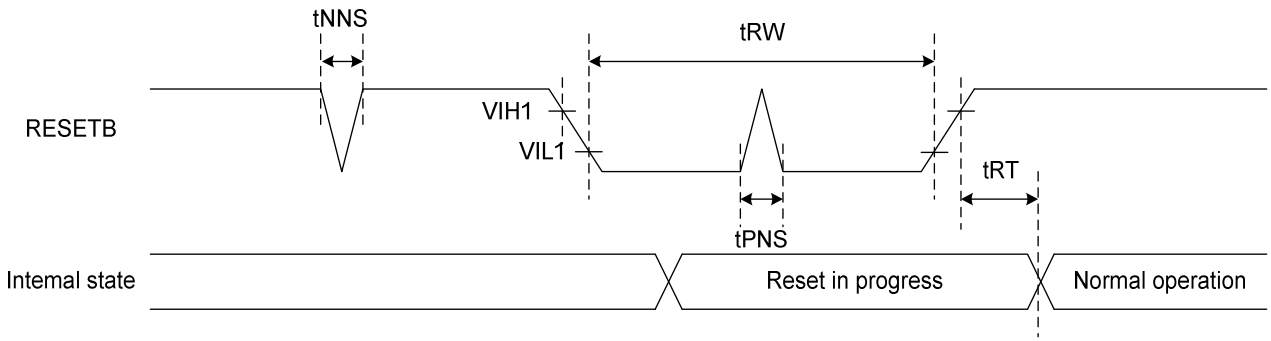

Figure 11.6: Reset timing

(VCC1=VCC2=2.7 to 3.6V, GND=0V, T_A=-40 to +95 ℃)

Signal	Paramete	Symbol	Spec.			Unit	Remarks
			Min.	Typ.	Max.		
RESETB	Reset pulse width	tRW	10	-	-	us	-
	Reset complete time	tRT	-	-	5	us	-
	Positive spike noise width	tPNS	-	-	100	ns	-
	Negative spike noise width	tNNS	-	-	100	ns	-

Table 11.4: Reset timing parameter

4.0 OPTICAL SPECIFICATIONS

4.1 Overview

The test of optical specifications shall be measured in a dark room (ambient luminance ≤1lux and temperature = 25±2℃) with the equipment of Luminance meter system (Goniometer system and TOPCON BM-5) and test unit shall be located at an approximate distance 50cm from the LCD surface at a viewing angle of θ and Φ equal to 0°. We refer to θØ=0 (=θ3) as the 3 o'clock direction (the "right"), θØ=90 (= θ12) as the 12 O'clock direction ("upward"), θØ=180 (= θ9) as the 9 O'clock direction ("left") and θØ=270(= θ6) as the 6 O'clock direction ("bottom"). While scanning θ and/or Ø, the center of the measuring spot on the Display surface shall stay fixed.

4.2 Optical Specifications

< Table9. Optical Table >

Item	Symbol	Condition	Min	Typ.	Max	Unit	Note
Viewing Angle	θL	Cr≥10	70	80	--	deg	Note 1
	θ_R		70	80	--		
	ψ_T		70	80	--		
	ψ_B		70	80	--		
Luminance	Lv	FF=0°	800	1000		-	
Response Time	Tr+Tf		--	30	35	ms	Note 3
Color Coordinate of CIE1931	Rx	θ=0°	-0.03	0.644	+0.03	-	Note 4
	Ry			0.344			
	Gx			0.315			
	Gy			0.632			
	Bx			0.157			
	By			0.054			
	Wx			0.285			
	Wy			0.327			
NTSC Ratio	NTSC	CIE1931	--	72	--	%	Note 5
Polarization Direction of Front Polarizer	PdF	-		0		deg	Absorption axis Note 6
Polarization Direction of Rear Polarizer	PdR			90		deg	

4.3 BACK LIGHT UNIT

The edge-lighting type of back light unit consists of 36 LEDs which is connected in serial.

Table 4.2 Electrical Characteristics Of Back Light Unit

Item	Units	Provisions			Conditions
		MIN	TYP	MAX	
Voltage	Vrms	_	18	_	I=180 ma Environmental Temperature 25±2℃ Environmental Temperature 25±2℃
Current	mA	_	360	_	I=180 ma Environmental Temperature 25±2℃

Input interface is 2 PIN, black is negative, red is positive

Note 1:**The definition of Viewing Angle**
Refer to the graph below marked by *θ* and *Φ*.

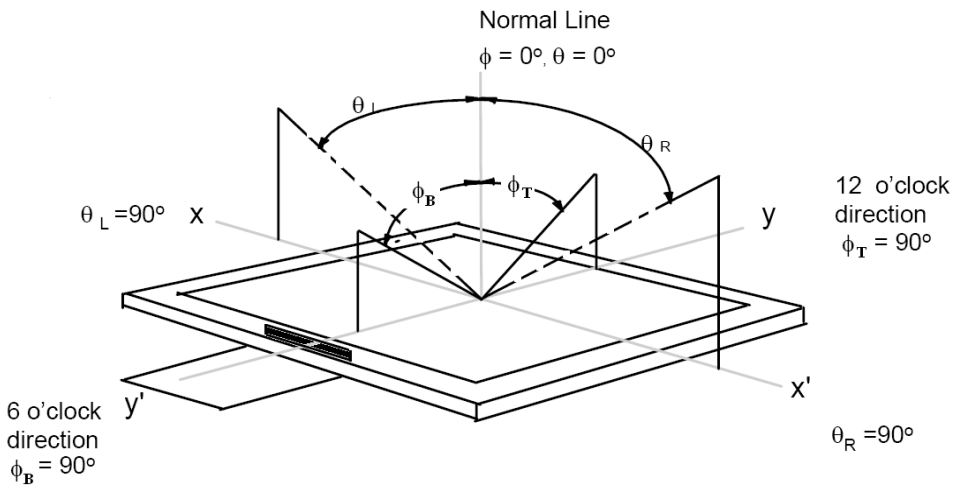

Note2:**ThedefinitionofContrastRatio**

$$\text{Contrast Ratio(CR)} = \frac{\text{Luminance When LCD is at “White” state}}{\text{Luminance When LCD is at “Black” state}}$$

(Contrast Ratio is measured in optimum common electrode voltage)

Note3:**DefinitionofResponse time.**(Test LCD using RD80S or similar equipments):
The output sign also photo detector are measured when the input sign also are changed from “black” to “white” (Voltage falling time)and from “white” to “black” (Voltage rising time), respectively .The response time is defined as the time interval between the 10% and 90% of amplitudes . Refer to figures below.

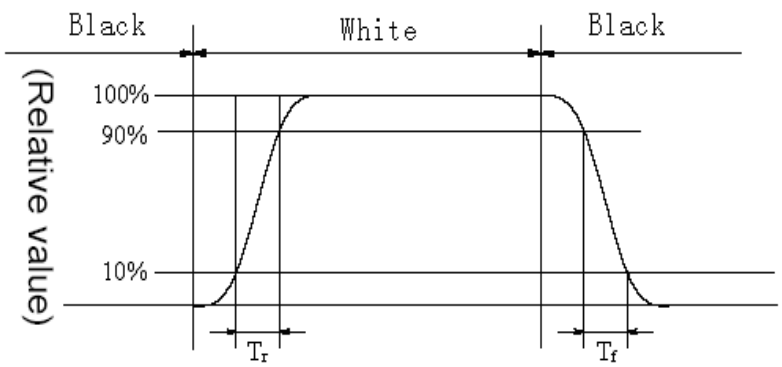

Note 4: Color Coordinates of CIE 1931
The test condition is at ILED=20mA and measured on the surface of LCD module at 25℃.
Measurement equipment:CS2000 or similar equipments
The Color Coordinate (CIE 1931) is the measurement of the center of the display shown in below figure.

Note 5: Definition of Color of CIE Coordinate and NTSC Ratio.

$$S = \frac{\text{area of RGB triangle}}{\text{area of NTSC triangle}} \times 100\%$$

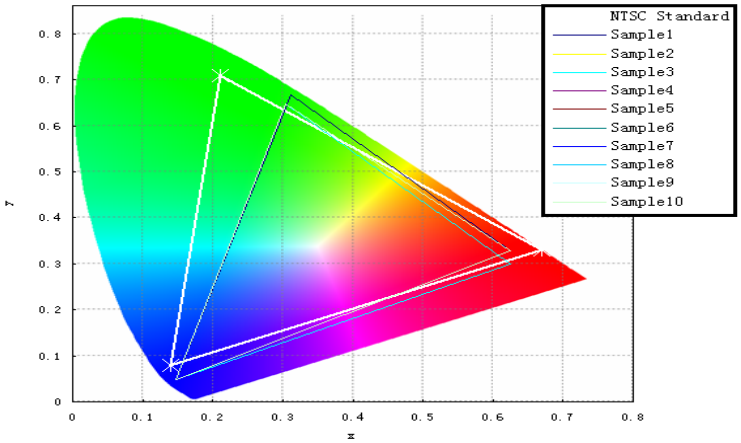

Note 6: Polarization Direction Definition

- Viewing direction is normal user viewing direction which is vertical to the display surface
- The polarizer which is closer to viewer is defined as Front Polarizer
- The polarizer which is on the rear side of viewer is defined as Rear Polarizer
- The X axis is defined as parallel line to top & bottom sidelines of the Active Area
- PdF which is marked in blue arrow is polarization degree of Front polarizer
- PdB which is marked in red arrow is polarization degree of Back polarizer
- The polarization degree parameter must be indicated in range of 0deg to 180deg according to above definition

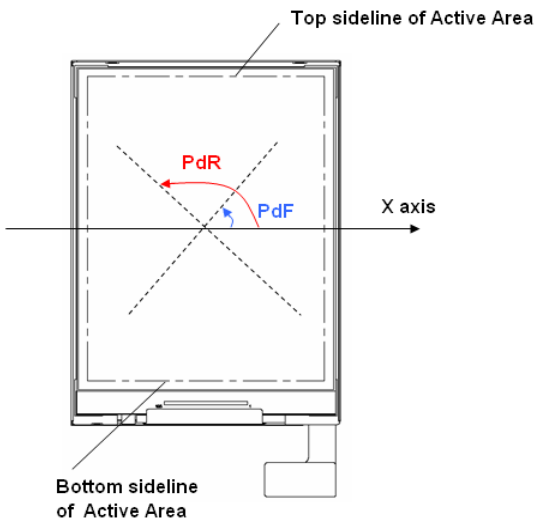

5.0 RELIABLITY TEST

The Reliability test items and its conditions are shown in below.

<Table 10. Reliability Test Parameters >

No	Test Items	Conditions
1	High temperature storage test	80℃ 48hr
2	Low temperature storage test	-30℃ 48hr
3	Low temperature operation test	-20℃ 48hr
4	High temperature operation test	70℃ 48hr
5	High temperature & high humidity (operation test)	50℃ 90%RH 48hr
6	Thermal Shock Test	-10℃~60℃ 0.5hr/cycle 50cycle
7		
8		
9		
10		
…		

6.0 PACKING INFORMATIO

TBD

7.0 Product Label

TBD

8.0 Handling & Cautions

8.1 Mounting Method

- The panel of the LCD consists of two thin glasses with polarizers which easily get damaged. So extreme care should be taken when handling the LCD.
- Excessive stress or pressure on the glass of the LCD should be avoided. Care must be taken to insure that no torsional or compressive forces are applied to the LCD unit when it is mounted.
- If the customer's set presses the main parts of the LCD, the LCD may show the abnormal display. But this phenomenon does not mean the malfunction of the LCD and should be pressed by the way of mutual agreement.
- To determine the optimum mounting angle, refer to the viewing angle range in the specification for each model.
- Mount a LCD module with the specified mounting parts.

8.2 Caution of LCD Handling and Cleaning

- Since the LCD is made of glass, do not apply strong mechanical impact or static load onto it. Handling with care since shock, vibration,and careless handling may seriously affect the product. If it falls from a high place or receives a strong shock, the glass may be broken.
- The polarizers on the surface of panel are made from organic substances. Be very careful for chemicals not to touch the polarizers or it leads the polarizers to be deteriorated.
- If the use of a chemical is unavoidable, use soft cloth with solvent（recommended below）to clean the LCD‘s surface with wipe lightly.
  -IPA(Isopropyl Alcohol), Ethyl Alcohol, Trichlorotriflorothane
- Do not wipe the LCD's surface with dry or hard materials that will damage the polarizers and others. Do not use the following solvent.
  -Water, Ketone, Aromatics
- It is recommended that the LCD be handled with soft gloves during assembly, etc. The polarizers on the LCD's surface are vulnerable to scratch and thus to be damaged by sharp particles.
- Do not drop water or any chemicals onto the LCD's surface.
- A protective film is supplied on the LCD and should be left in place until the LCD is required for operation.
- The ITO pad area needs special careful caution because it could be easily corroded. Do not contact the ITO pad area with HCFC,Soldering flux,Chlorine,Sulfur,saliva or fingerprint. To prevent the ITO corrosion, customers are recommended that the ITO area would be covered by UV or silicon.

8.3 Caution Against Static Charge

- The LCD modules use C-MOS LSI drivers, so customers are recommended that any unused input terminal would be connected to Vdd or Vss, do not input any signals before power is turn on, and ground you body, work/assembly area, assembly equipments to protect against static electricity.
- Remove the protective film slowly, keeping the removing direction approximate 30-degree not vertical from panel surface, If possible, under ESD control device like ion blower, and the humidity of working room should be kept over 50%RH to reduce the risk of static charge.
- Avoid the use work clothing made of synthetic fibers. We recommend cotton clothing or other conductivity-treated fibers.
- In handling the LCD, wear non-charged material gloves. And the conducting wrist to the earth and the conducting shoes to the earth are necessary.

8.4 Caution For operation

- It is indispensable to drive the LCD within the specified voltage limit since the higher Voltage than the limit causes the shorter LCD's life. An electro-chemical reaction due to DC causes undesirable deterioration of the LCD so that the use of DC drive should avoid.
- Do not connect or disconnect the LCD to or from the system when power is on.
- Never use the LCD under abnormal conditions of high temperature and high humidity.
- When expose to drastic fluctuation of temperature (hot to cold or cold to hot）,the LCD may be affected; Specifically, drastic temperature fluctuation from cold to hot ,produces dew on the LCD's surface which may affect the operation of the polarizer and the LCD.
- Response time will be extremely delayed at lower temperature than the operating temperature range and on the other hand at higher temperature LCD may turn black at temperature above its operational range. However those phenomena do not mean malfunction or out of order with the LCD. The LCD will revert to normal operation once the temperature returns to the recommended temperature range for normal operation.
- Do not display the fixed pattern for a long time because it may develop image sticking due to the LCD structure. If the screen is displayed with fixed pattern, use a screen saver.

8.5 Packaging

- Modules use LCD element, and must be treated as such.
  -Avoid intense shock and falls from a height.
  -To prevent modules from degradation, do not operate or store them exposed directly to sunshine or high temperature/humidity for long periods.

8.6 Storage

- A slight dew depositing on terminals is a cause for electro-chemical reaction resulting in terminal open circuit. Relative humidity of the environment should therefore be kept below 60%RH.
- Original protective film should be used on LCD's surface (polarizer). Adhesive type protective film should be avoided, because it may change color and/or properties of the polarizers.
- Do not store the LCD near organic solvents or corrosive gasses.
- Keep the LCD safe from vibration, shock and pressure.
- Black or white air-bubbles may be produced if the LCD is stored for long time in the lower temperature or mechanical shocks are applied onto the LCD.
- In the case of storing for a long period of time for the purpose or replacement use, the following ways are recommended.
  -Store in a polyethylene bag with sealed so as not to enter fresh air outside in it.
  -Store in a dark place where neither exposure to direct sunlight nor light is.
  -Keep temperature in the specified storage temperature range.
  -Store with no touch on polarizer surface by the anything else. If possible, store the LCD in the packaging situation LCD when it was delivered.

8.7 Safety

- For the crash damaged or unnecessary LCD, it is recommended to wash off liquid crystal by either of solvents such as acetone and ethanol an should be burned up later.
- In the case the LCD is broken, watch out whether liquid crystal leaks out or not. If your hands touch the liquid crystal, wash your hands cleanly with water an soap as soon as possible.
- If you should swallow the liquid crystal, first, wash your mouth thoroughly with water, then drink a lot of water and induce vomiting, and then, consult a physician.
- If the liquid crystal should get in your eyes, flush your eyes with running water for at least fifteen minutes.
- If the liquid crystal touches your skin or clothes, remove it and wash the affected part of your skin or clothes with soap and running water.

9.Mechanical Drawing

Front View

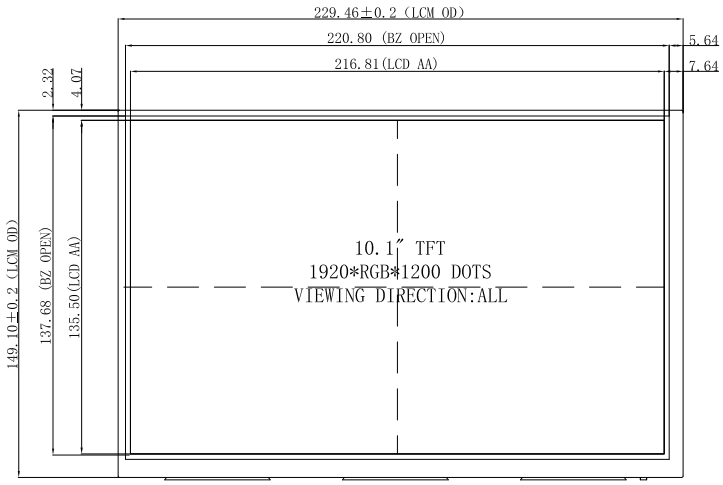

Side View

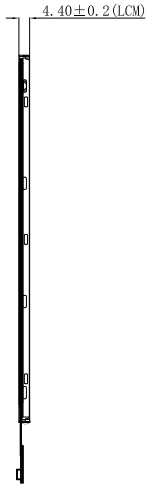

Back View

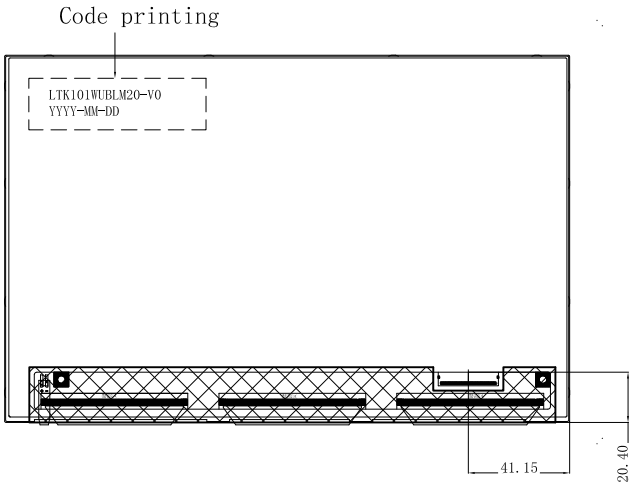

PIN DESCRIPTION

1	K-
2	K-
3	A+
4	A+
5	NC
6	GND
7	ELV3P
8	ELV3N
9	GND
10	ELV2P
11	ELV2N
12	GND
13	ELVCLKP
14	ELVCLKN
15	GND
16	ELV1P
17	ELV1N
18	GND
19	ELV0P
20	ELV0N
21	GND
22	OLV3P
23	OLV3N
24	GND
25	OLV2P
26	OLV2N
27	GND
28	OLVCLKP
29	OLVCLKN
30	GND
31	OLV1P
32	OLV1N
33	GND
34	OLV0P
35	OLV0N
36	GND
37	I2C_SDA
38	I2C_SCL
39	VDD_OTP
40	EEPEN
41	WDDIN
42	WDDIN
43	WDDIN
44	WDDIN
45	WDDIN

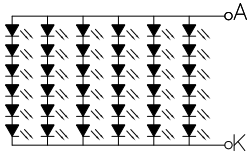

Backlight LED Circuit

If= 360 mA
Vf= 18 V(typ)

Notes:
1. Display : 10.1″, TFT
2. Resolution: 1920xRGBx1200
3. LCD Viewing Direction: ALL,
4. Display Mode: Normally Black
5. LCM Bringhtness: 1000cd/m²(TYP)
6. unmark Tolerance:±0.2
7. OPERATING TEMP: -20° C~ +70° C
8. STORAGE TEMP: -30° C~ +80° C
9. Requirements on Environmental Protection: ROHS

REV	DESCRIPTION	DATE	NAME
3			
2			
1			
0	NEW	2023.06.08	Jerry

LEADTEK DISPLAY

LEADTEK COMPANY LIMITED

SCALE:1/1	UNIT:mm	PAGE:1/1	Approve	Check	Drawn
Part No:	LTK101WUBLM20	VER:V0	Ian	Jack	Jerry
Customer No:					