Request information

PRODUCT SPECIFICATION

TFT-LCD MODULE

Module No: 100341-01

☑ Preliminary Specification

☐ Approval Specification

Designed by	Checked by	Approved by

Final Approval by Customer

Approved by	Comment

For more information, contact us:

WWW.DCLTEK.COM | 1-800-407-8917 | SALES@DCLTEK.COM

※The specification of TBD should refer to the measured value of sample . If there is difference between the design specification and measured value, we naturally shall negotiate and agree to solution with customer.

This document contains confidential and proprietary information of DCL Technologies, Inc. It is provided solely for the recipient's evaluation and may not be reproduced, disclosed, or distributed, in whole or in part, without the prior written consent of DCL Technologies, Inc.

1.Document Revision History

Version	Contents	Date	Note
V0	Initial version	2025.06.09	

1.0 General Description

1.1 Introduction

100341-01 is a color active matrix thin film transistor (TFT) liquid crystal display (LCD) that uses amorphous silicon TFT as a switching device. This model is composed of a TFT LCD panel and a driving circuit.This TFT LCD has a 9.7 (4:3) inch diagonally measured active display area with (1024 horizontal by 768 vertical pixel) resolution.

1.2. Features

9.7 (4:3 diagonal) inch configuration
Compatible with NTSC & PAL system
Image Reversion: UP/DOWN and LEFT/RIGHT
ROHS design

1.3. General information

Item	Specification	Unit
Outline Dimension	210.2 (H) x 164.25 (V) x2.8 (D)	mm
Display area	196.61 (H) x 147.46 (V)	mm
Number of Pixel	1024RGB (H) x768(V)	pixels
Pixel pitch	0.192(H) x 0.192 (V)	mm
Pixel arrangement	RGB Vertical stripe	
Display mode	Normally Black (IPS)	
Color Filter Array	RGB vertical stripes	
Backlight	White LED	
Weight	TBD	g
Interface	LVDS	

2. Mechanical Drawing

This document contains confidential and proprietary information of DCL Technologies, Inc. It is provided solely for the recipient's evaluation and may not be reproduced, disclosed, or distributed, in whole or in part, without the prior written consent of DCL Technologies, Inc.

Front View

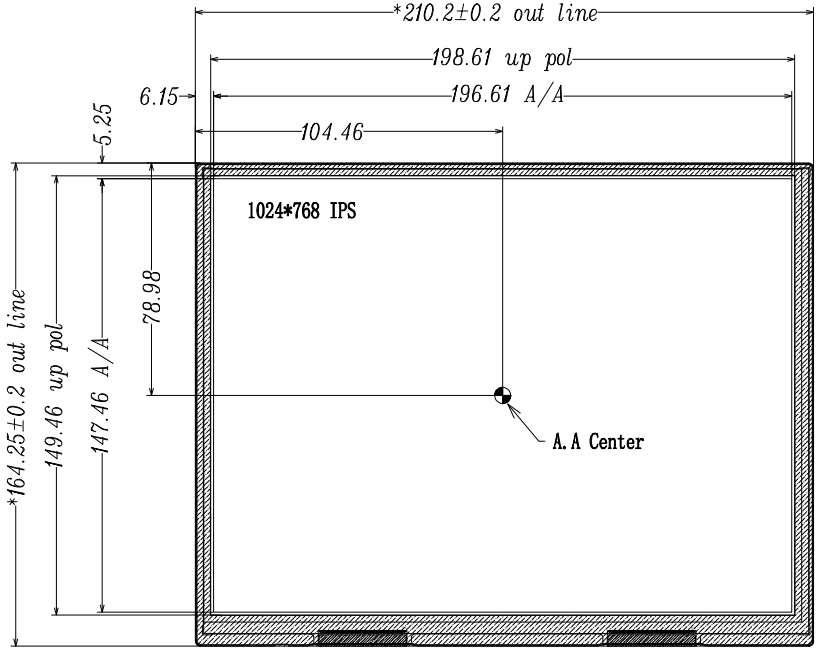

Side View

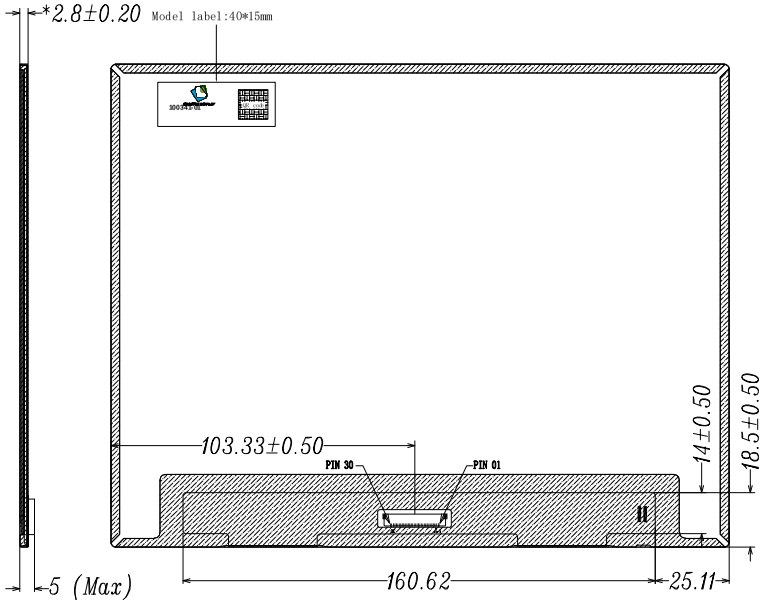

Back View

PIN DESCRIPTION

1	NC
2	VCC
3	VCC
4	VEDID
5	NC
6	CLKEDID
7	DATAEDID
8	Rxin0-
9	Rxin0+
10	GND
11	Rxin1-
12	Rxin1+
13	GND
14	Rxin2-
15	Rxin2+
16	GND
17	RXCLK-
18	RXCLK+
19	GND
20	NC
21	LED+
22	LED+
23	NC
24	LED-
25	LED-
26	LED-
27	LED-
28	LED-
29	LED-
30	NC

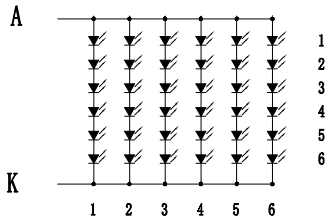

IF=120mA, VF=19.2V (TYP)

Notes:
1. Display : 9.7″, TFT
2. Resolution: 1024xRGBx768
3. LCD Viewing Direction: all
5. Display Mode: Normally Black
6. LCM Brightness: 350cd/m²(TYP)
7. unmark Tolerance:±0.2
8. OPERATING TEMP: -0° C~+50° C
9. STORAGE TEMP: -20° C~+60° C
10. Requirements on Environmental Protection: ROHS
11. Critical Dimensions Under Strict Control: “*”

REV	DESCRIPTION	DATE	NAME
3			
2			
1			
0	NEW	2025.06.09	

DCL TEK

SCALE:1/1	UNIT:mm	PAGE:1/1		Approve	Check	Drawn
Part No:	100341-01		VER:V0			
Customer No:						

3.0 Interface Pin Connection

(Input signal): FPC Down Connector, 30pin, pitch = 0.5mm)

TFT LCD Module : FPC DOWN Connector, (20455-030E-12 (I-PEX), 30pin,pitch = 0.5mm)

Pin No.	Symbol	Function	Reamrk
1	NC	No connection	
2-3	VCC	Power Supply, 3.3V(typ)	
4	VEDID	DDC Power+3.3V	
5	NC	No connection	
6	CLKEDID	DDC Clock	
7	DATAEDID	DDC Data	
8	Rxin0-	LVDS differential data input	
9	Rxin0+	LVDS differential data input	
10	GND	Ground	
11	Rxin1-	LVDS differential data input	
12	Rxin1+	LVDS differential data input	
13	GND	Ground	
14	Rxin2-	LVDS differential data input	
15	Rxin2+	LVDS differential data input	
16	GND	Ground	
17	RxCLK-	LVDS differential clock input	
18	RxCLK+	LVDS differential clock input	
19	GND	Ground	
20	NC	No connection	
21-22	LED+	LED Anode(Positive)	
23	NC	No connection	
24-29	LED-	LED Cathode(Negative)	
30	NC	No connection	

4.0 Absolute Maximum Ratings

4.1 Electrical Absolute Rating

4.1.1 TFT LCD Module

Item	Symbol	Min.	Max.	Unit	Note
Power supply voltage	VCC	3.0	3.6	V	GND=0
	VLED	-0.5	19.8	V	AGND=0
Analog Signal Input Level	V_R, V_G, V_B	-0.2	AV_{DD}+0.2	V	
Logic Signal Input Level	V_I	-0.3	DV_{DD} +0.3	V	

Note (1) Stresses above those listed under "Absolute Maximum Rating" may cause permanent damage to the device. These are stress ratings only. Functional operation of this device at indicated in the operational sections(6.1) of this specification.

4.2 Environment Absolute Rating

Item	Symbol	Min.	Max.	Unit	Note
Operating Temperature	Topa	-0	50	℃	
Storage Temperature	Tstg	-20	60	℃	

4.3 Back-light Unit:

PARAMETER	Sym.	Min.	Typ.	Max.	Unit	Test Condition	Note
LED Current	IF	–	120	–	mA	–	–
LED Voltage	VF	18	19.2	19.8	V	I=120mA	–
Brightness		–	350	–	cd/m	I=120mA	
Life Time			3000	–	Hr.	I=120mA	–
Color	White						

Note (1) Permanent damage may occur to the LCD module if beyond this specification. Functional operation should be restricted to the conditions described under normal operating conditions.

(2)Ta=25±2℃

(3)Test condition: LED Current 120mA

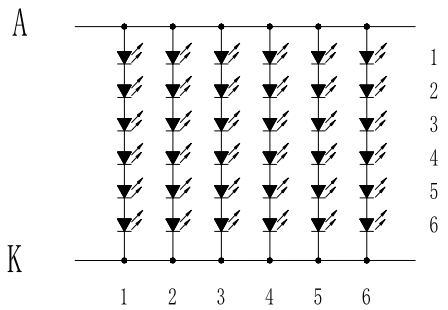

6串*6并=36LED

LED 电路图

5.0 Optical Characteristics

5.1 Optical specification

Item		Symbol	Condition	Min.	Typ.	Max.	Unit	Note
Contrast Ratio		CR	Θ=0 Normal viewing angle	750	900	—		(1)(2)(4)
Response time		Tr+ Tf		—	20	28	msec	(1)(3)
Color chromaticity (CIE1931)		White	W_x	-0.030	0.291	+0.030		(1)(4) CF Glass C light @CA310 TEST
			W_y		0.300			
		Red	Rx		0.588			
			Ry		0.340			
		Green	Gx		0.343			
			Gy		0.568			
		Blue	Bx		0.147			
			By		0.094			
Viewing angle	Hor.	Θ_L	CR>10	-	89	—		
		Θ_R		-	89	—		
	Ver.	Θ_U		-	89	—		
		Θ_D		-	89	—		
LCM Brightness				300	350	--	Cd/m2	
Luminance Uniformity		YU		75	80		%	

5.2 Measuring Condition

- Measuring surrounding : dark room
- Ambient temperature : 25±2℃
- 30min. warm-up time.

5.3 Measuring Equipment

- TOPCON BM-7
- Measuring spot size : field 2°

Note (1) Definition of Vsat and Vth (at 20℃)

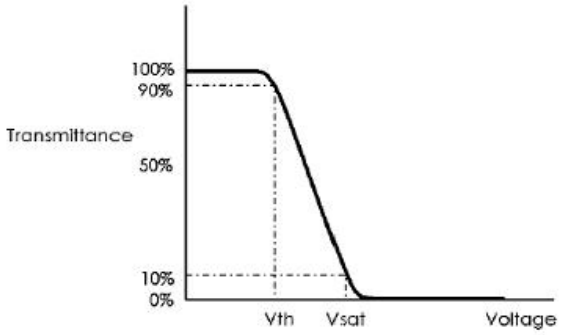

Note (2) Definition of Viewing Angle :

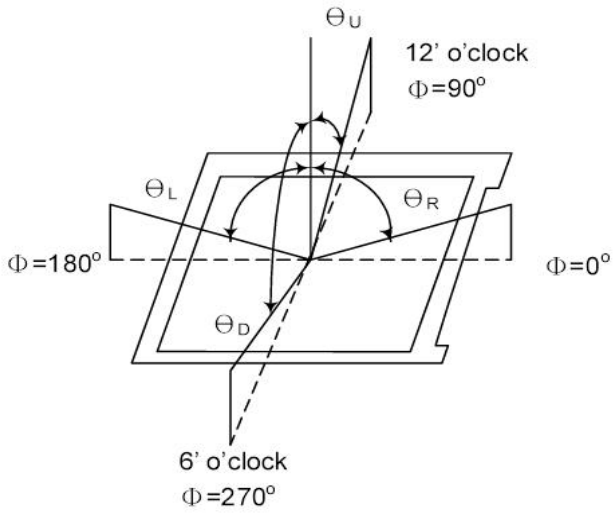

Note (3) Definition of Contrast Ratio(CR) :
measured at the center point of panel

$$CR = \frac{\text{Luminance with all pixels white}}{\text{Luminance with all pixels black}}$$

Note (4) Definition of Response Time : Sum of T_R and T_F

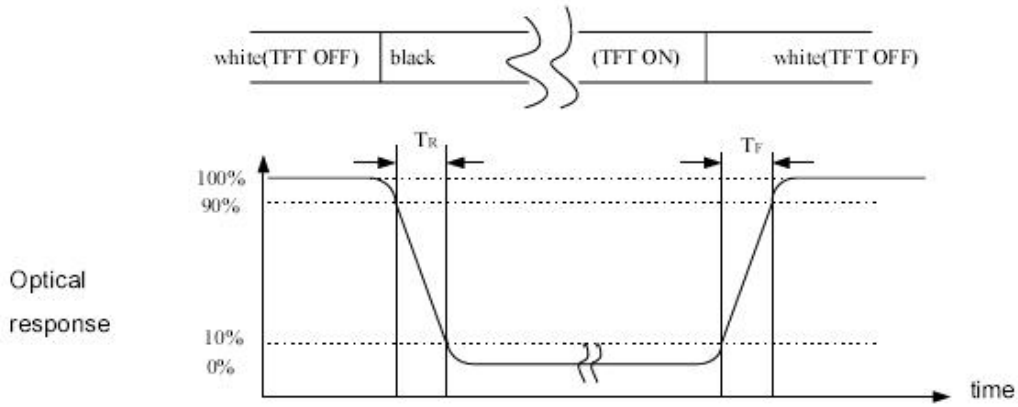

Note (5) Definition of optical measurement setup

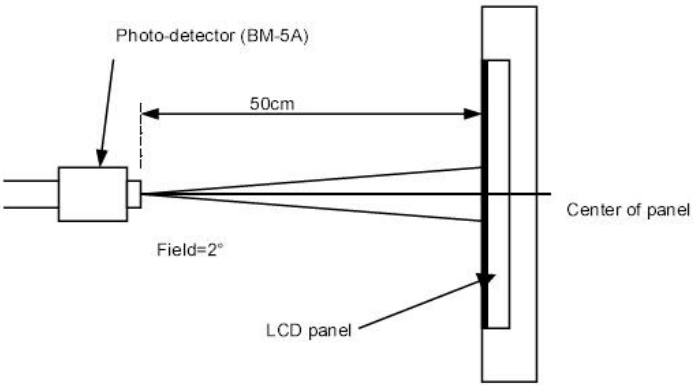

Note (6) Definition of brightness uniformity

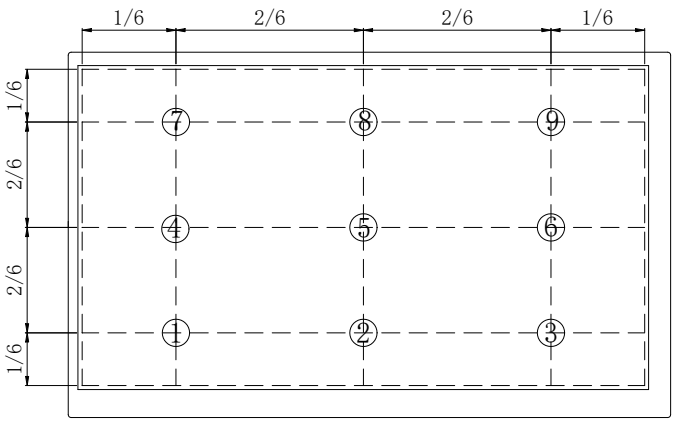

Note (7) Rubbing Direction (The different Rubbing Direction will cause the different optima view direction.

5.4.1 Block Diagram

5.4.2 TFT-LCD Module

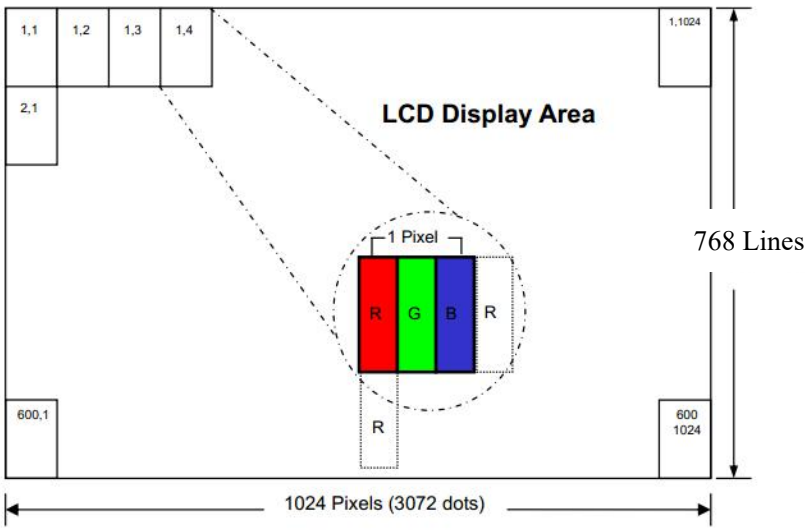

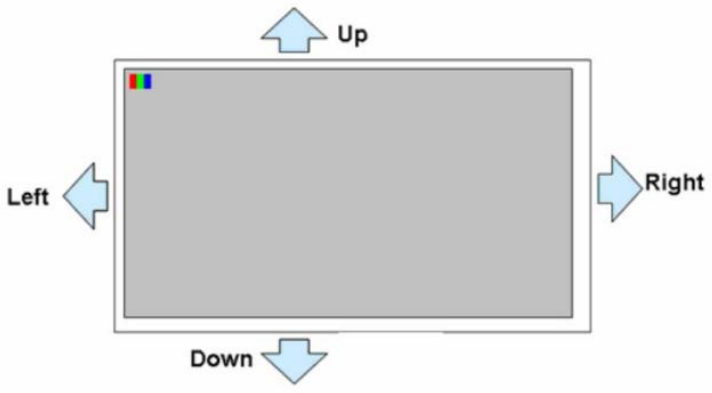

6. Electrical Characteristics

6.1 TFT LCD Module

Item	Symbol	Min.	Typ.	Max.	Unit	Note
Supply Voltage	VCC	3.0	3.3	3.6	V	
	VLED	18	19.2	19.8	V	
Input signal voltage	V_{IH}	$0.7DV_{DD}$	-	DV_{DD}	V	
	V_{IL}	0	-	$0.3DV_{DD}$	V	
Current supply	IVCC	-	250	300	mA	VDD=3.3V
	IVLED	-	120	150	mA	VLED=19.2V

6.2 Timing Diagram of Interface Signal

6.7.1. Vertical input timing

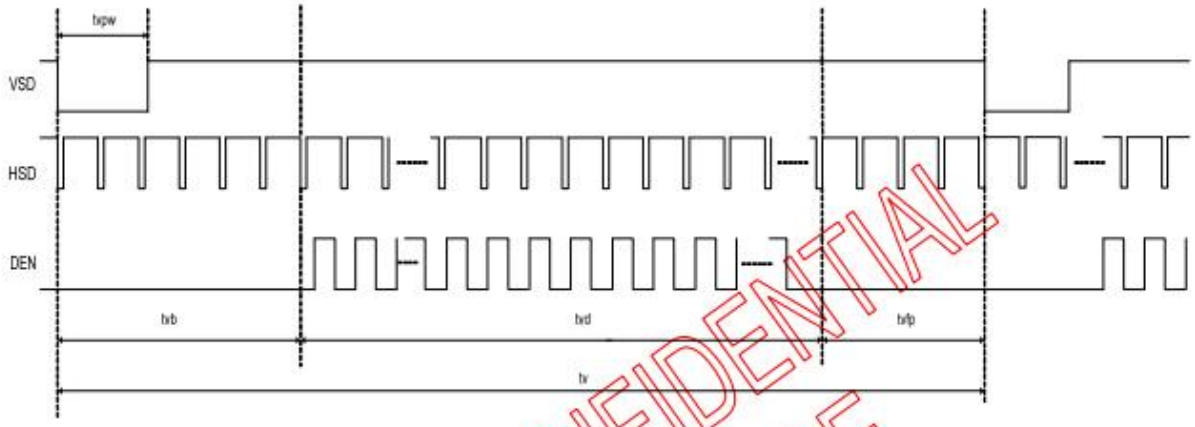

Vertical input timing

6.7.2. Horizontal input timing

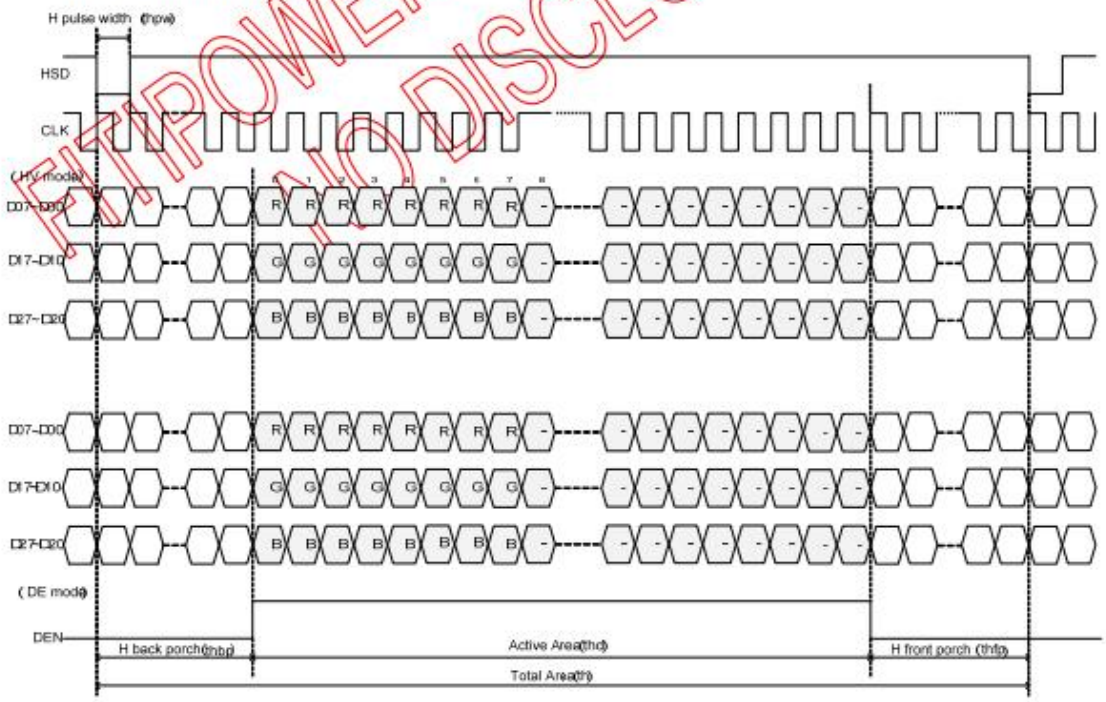

FITPOWER CONFIDENTIAL
NO DISCLOSURE

For 1024x768 panel

DE mode

Parameter	Symbol	Value			Unit
		Min.	Typ.	Max.	
DCLK frequency @ Frame rate = 60Hz	fclk	52	65	71	MHz
Horizontal display area	thd	1024			DCLK
HSYNC period time	th	1114	1344	1400	DCLK
HSYNC blanking	thb+thfp	90	320	376	DCLK
Vertical display area	tvd	768			H
VSYNC period time	tv	778	806	845	H
VSYNC blanking	tvb+tvfp	10	38	77	H

HV mode

Horizontal input timing

Parameter		Symbol	Value			Unit
Horizontal display area		thd	1024			DCLK
DCLK frequency @ Frame rate = 60Hz		fclk	Min.	Typ.	Max.	
			57	65	70.5	MHz
1 Horizontal Line		th	1200	1344	1400	DCLK
HSYNC pulse width	Min.	thpw	1			
	Typ.		-			
	Max.		140			
HSYNC blanking		thb	160	160	160	
HSYNC front porch		thfp	16	160	216	

Vertical input timing

Parameter	Symbol	Value			Unit
		Min.	Typ.	Max.	
Vertical display area	tvd	768			H
VSYNC period time	tv	792	806	840	H
VSYNC pulse width	tvpw	1	-	20	H
VSYNC Blanking (tvb)	tvb	23	23	23	H
VSYNC Front porch (tvfp)	tvfp	1	15	49	H

DCLTEK CONFIDENTIAL NO DISCLOSE

6.3 Power Sequence

Power On : DVDD→AVDD/VGL →VGH →Video &Logic Signal→Backlight
Power Off : Backlight→Video &Logic Signal→ VGH→AVDD/VGL→DVDD

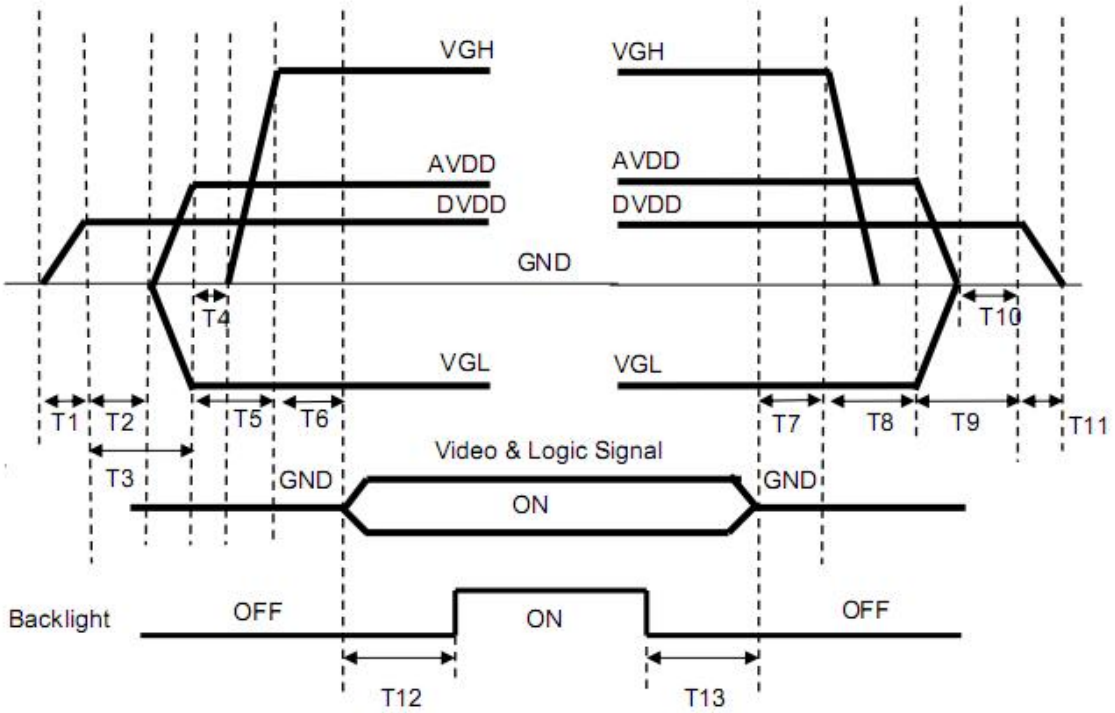

0<T1≦10ms
T2>0ms
T3>20ms
T4>0ms
T5>10ms
0<T6≦10ms
T12≧200ms

T7>0ms
T8>0ms
T9>0ms
T10>0ms
0<T11≦10ms
T13≧200ms

6.4 LVDS mode data input format

6bit LVDS input

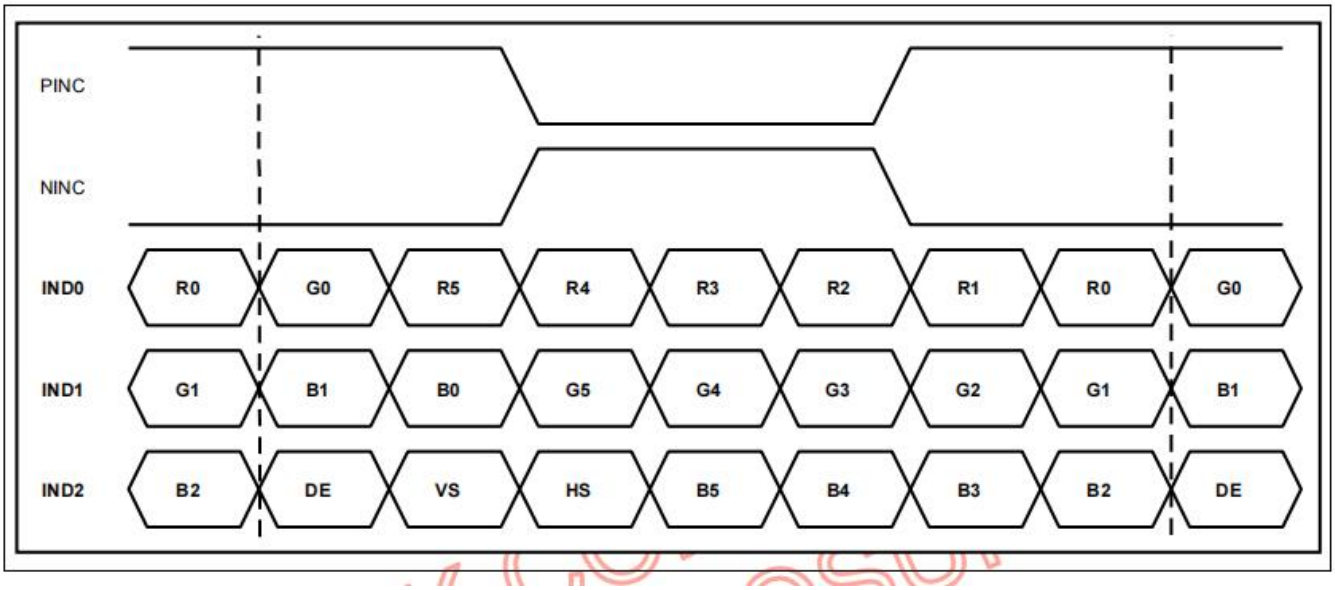

6.5 DC Electrical Characteristics

LVDS mode (Receiver Differential Input: PIND0~PIND3, NIND0~NIND3, PINC, NINC)

Parameter	Symbol	Min.	Typ.	Max.	Unit	Condition
Differential input high threshold voltage	R_{xVTH}			+0.1	V	R_{xVCM} =1.2V
Differential input low threshold voltage	R_{xVTL}	-0.1			V	
Input voltage range (singled-end)	R_{XVIN}	0		2.4	V	
Differential input common mode voltage	R_{xVCM}	$\|V_{ID}\|/2$		$2.4-\|V_{ID}\|/2$	V	
Differential input voltage	$\|V_{ID}\|$	0.2		0.6	V	
Differential input leakage current	RV_{xliz}	-10		+10	μA	
LVDS Digital Operating Current	Iddlvds	-	40	50	mA	Fclk=65 MHz, VDD=3.3V
LVDS Digital Stand-by Current	Istlvds	-	10	50	μA	Clock & all Functions are stopped

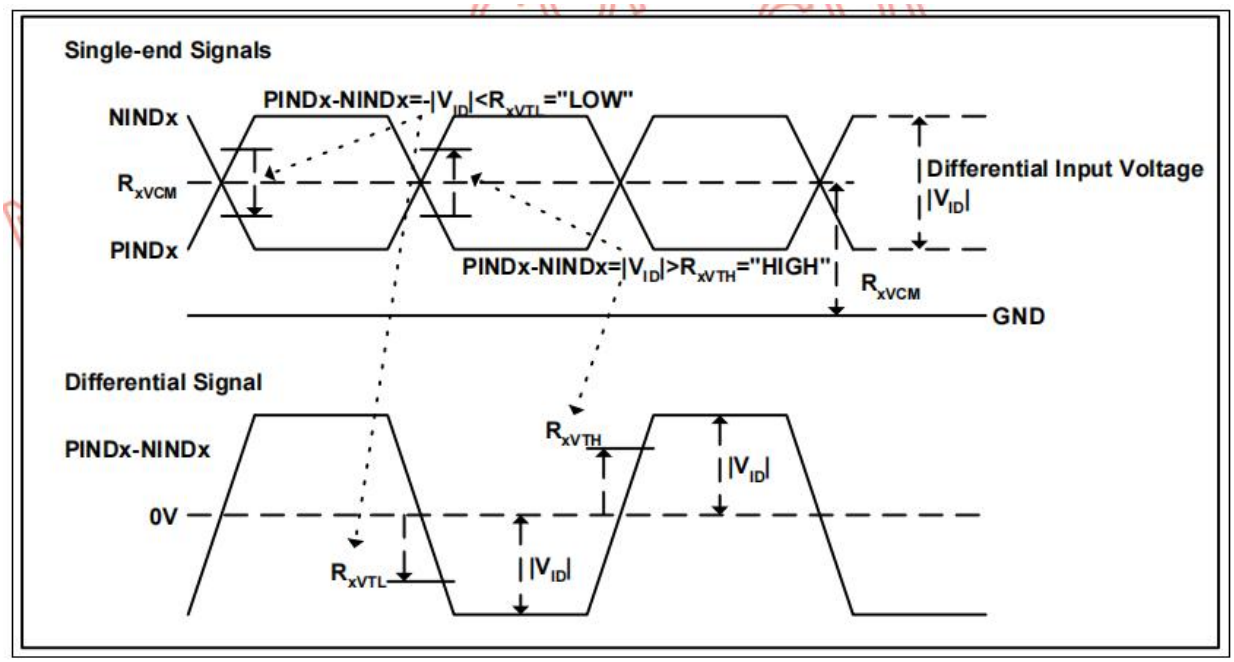

Power

Parameter	Symbol	Min.	Typ.	Max.	Unit	Condition
DRV output voltage for PWM	VDRV	0	-	VDD	V	
Feedback voltage for PWM	VFB	1.1	1.2	1.3	V	
Duty cycle maximum	Dmax	-	-	85	%	
VCOM buffer input voltage	VCOMI	3	5	7	V	
VCOM buffer output voltage	VCOMO	VCOMI – 0.2	VCOMI	VCOMI+ 0.2	V	
AVDDG output variation	VAVDDG	10.9	11	11.1	V	AVDD = 11.5V , No load

CONFIDENTIAL

7.0 Reliability test items

NO	Item	Conditions	Remark
1	High Temperature Storage	Ta=+60℃,48hrs	
2	Low Temperature Storage	Ta=-20℃,48hrs	
3	High Temperature Operation	Ta=+50℃,48hrs	
4	Low Temperature Operation	Ta=-10℃, 48hrs	
5	High Temperature and High Humidity (operation)	Ta=+50℃,90%RH,48hrs	
6	Thermal Cycling Test (non operation)	-20℃(0.5hr)→+70℃(0.5hr),100cycles	
7	Vibration	1.Random:1.04G,10-500HZ,X,Y,Zdirection 30min/each direction 2.Sweep sine:1.5G, 5~500Hz, X/Y/Z,30min/each direction	
8	Shock	100G,6ms, ±X, ±Y, ±Z 3 time for each direction	JIS C7021, A-10 (Condition A)
9	Vibration (with carton)	Random:1.04Grms, 10~500Hz, X/Y/Z 45min/each direction Fixed:5Hz, 1.5Grms, X/Y/Z 45min/each direction	
10	Drop (with carton)	Height: 60cm 1 corner, 3 edges, 6 surfaces	JIS Z0202
11	Electrostatic Discharge	±200V,200PF,0Ω1 time/each terminal	

Note: All tests above are practiced at module type.
There is no display function NG issue occurred, All the cosmetic specification is judged before the reliability stress.

8.0 Packing form-TBD

9.0 General Precaution

9.1 Use Restriction

This product is not authorized for use in life supporting systems, aircraft navigation control systems, military systems and any other application where performance failure could be life-threatening or otherwise catastrophic.

9.2 Asembly Precaytton

9.2.1 Please use the mounting hole on the module side in installing and do not bending or wrenching LCD in assembling. And please do not drop, bend or twist LCD module in handling.
9.2.2 Please design display housing in accordance with the following guide lines. 10.2.2.1 Housing case must be destined carefully so as not to put stresses on LCD all sides and not to wrench module. The stresses may cause non-uniformity even if
there is no non-uniformity statically.
9.2.2.2 Keep sufficient clearance between LCD module back surface and housing when the LCD module is mounted. The clearance in the design is recommended
taking into account the tolerance of LCD module thickness and mounting
structure height on the housing.
9.2.3 Please do not push or scratch LCD panel surface with any-thing hard. And do not soil LCD panel surface by touching with bare hands. (Polarizer film, surface of LCD
panel is easy to be flawed.)
9.2.4 Please do not press any parts on the rear side such as source IC, gate IC, and FPC during handling LCD module. If pressing rear part is unavoidable, handle the LCD
module with care not to damage them.
9.2.5 Please wipe out LCD panel surface with absorbent cotton or soft cloth in case of it being soiled.
9.2.6 Please wipe out drops of adhesives like saliva and water on LCD panel surface immediately. They might damage to cause panel surface variation and color change. 9.2.7 Please do not take a LCD module to pieces and reconstruct it. Resolving and reconstructing modules may cause them not to work well.

9.3 Disassembling or Modification

Do not disassemble or modify the module. It may damage sensitive parts inside LCD module, and may cause scratches or dust on the display. HannStar does not warrant the module, if customers disassemble or modify the module.

9.4 Breakage of LCD Panel

9.4.1 If LCD panel is broken and liquid crystal spills out, do not ingest or inhale liquid crystal, and do not contact liquid crystal with skin.
9.4.2 If liquid crystal contacts mouth or eyes, rinse out with water immediately.
9.4.3 If liquid crystal contacts skin or cloths, wash it off immediately with alcohol and rinse thoroughly with water.
9.4.4 Handle carefully with chips of glass that may cause injury, when the glass is broken.

9.5 Absolute Maximum Ratings and Power Protection Circuit

9.5.1 Do not exceed the absolute maximum rating values, such as the supply voltage variation, input voltage variation, variation in parts' parameters, environmental temperature, etc., otherwise LCD module may be damaged.
9.5.2 Please do not leave LCD module in the environment of high humidity and high temperature for a long time.
9.5.3 It's recommended employing protection circuit for power supply.
9.6 Operation
9.6.1 Do not touch, push or rub the polarizer with anything harder than HB pencil lead.Use fingerstalls of soft gloves in order to keep clean display quality, when persons handle the LCD module for incoming inspection or assembly.
10.6.2 When the surface is dusty, please wipe gently with absorbent cotton or other soft material.
9.6.3 Wipe off saliva or water drops as soon as possible. If saliva or water drops contact with polarizer for a long time, they may causes deformation or color fading.
9.6.4 When cleaning the adhesives, please use absorbent cotton wetted with a little petroleum benzine or other adequate solvent.

9.7 Static Electricity

9.7.1 Protection film must remove very slowly from the surface of LCD module to prevent from electrostatic occurrence.
9.7.2 Because LCD module uses CMOS-IC on TFT-LCD panel, it is very weak to electrostatic discharge. Please be careful with electrostatic discharge.
9.7.3 Persons who handle the module should be grounded through adequate methods.

9.8 Disposal

When disposing LCD module, obey the local environmental regulations.

9.9 OTHERS

9.9.1 A strong incident light into LCD panel might cause display characteristics' changing inferior because of polarizer film, color filter, and other materials becoming inferior. Please do not expose LCD module direct sunlight land strong UV rays.
9.9.2 Please pay attention to a panel side of LCD module not to contact with other materials in preserving it alone.
9.9.3 For the packaging box, please pay attention to the followings:
9.9.3.1 Packaging box and inner case for LCD are designed to protect the LCDs from the damage or scratching during transportation. Please do not open except picking LCDs up from the box.
9.9.3.2 Please do not pile them up more than 6 boxes. (They are not designed so.) And please do not turn over.
9.9.3.3 Please handle packaging box with care not to give them sudden shock and vibrations. And also please do not throw them up.
9.9.3.4 Packing box and inner case for LCDs are made of cardboard. So please pay attention not to get them wet. (Such like keeping them in high humidity or wet place can occur getting them wet.)

DCLTEK

Incoming Inspection Standard

品质允收标准

Model N0. /产品型号: Applicable to Touch Screen

Updated Date /生效日期: 2025.04.01

Version / 版 本 号: V0

Record of Revision /修订履历.

Version /版本号	Revision Record /修订内容	Reviser /修订人	Revision Date /修订日期
V0	首发 / Initial release		2025.04.01

1、Scope of application /适用范围.

Applicable to Touch Screen.

2、Inspection conditions and environment / 检验条件与环境.

2.1、Inspection Conditions / 检验条件:

2.1.1、Inspection Distance / 检测距离: 35cm ±5cm.

2.1.2、Inspection time /检验时间：Displays performance test /功能测试：2~3S /Image，

Appearance Inspection / 外观检验：8~10S.

2.1.3、Inspection the viewing angle /检验视角:

Display Inspection Angle /显示检验角度： ±45°.

Appearance Inspection Angle /外观检验角度：±45°.

Eye position /眼睛位置：

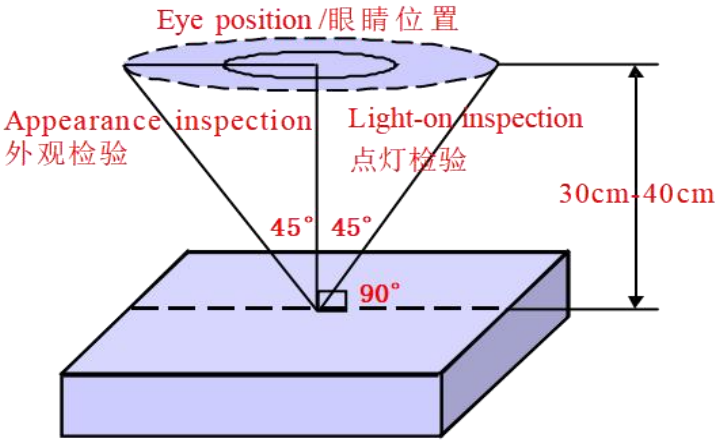

(Perpendicular to LCD panel surface /垂直于LCD表面)

2.2、 Inspection environment /检验环境：

Temperature / 温度		25±5℃
Humidity / 湿度		55±5%RH
Brightness 亮度	Appearance Inspection / 外观检验	800~1000 Lux
	Display Inspection / 功能检验	200~300 Lux

2.3、Sampling conditions / 抽样方式.

Sampling Plan /抽样计划		GB/T 2828.1- 2003
		Batch single sampling/批量单次抽样
		General inspection level：Ⅱ/一般检验水平：二级
AQL	Major Defect /主要缺陷	0.25
	Minor Defect /次要缺陷	0.65

3、Terms and definitions /术语和定义.

3.1、Defect classification / 缺陷分类：

3.1.1、Major defects /主要缺陷: Defects that cause the product to fail or reduce the usability of the product / 引起产品功能失效和减少产品的有效使用与操作的缺陷.

3.1.2、Minor defects / 次要缺陷: Defects that do not affect the functionality and effective use and operation of the product / 不影响产品功能和有效使用与操作的缺陷.

3.2、Point defects / 点状缺陷：

The size of a punctate defect is defined by the diameter D, and the average diameter of the defect is D=1/2(W+L) / 点状缺陷由直径 D 定义大小，缺陷的平均直径 D=1/2(W+L).

3.3、line defects / 线状缺陷：

When defect size L ≥ 2W,the defect count as liner type defect.Size of linear defect is defined by length (L) and the maximum width (W)

当缺陷尺寸 L≥2W 时，被视为线状缺陷，线状缺陷是由长度（L）和最大宽度（W）定义的.

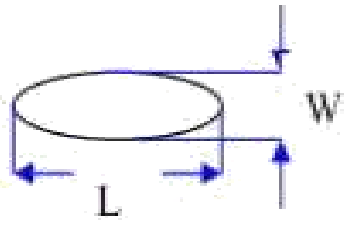

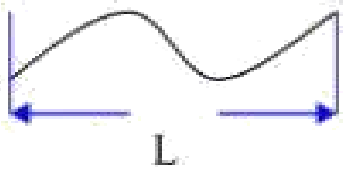

3.4、LCD sub-pixels / LCD 子像素点:

The sub-pixel defect area is greater than 50% of the LCD sub-pixel area, and is visible through ND5% masking

子像素点缺陷面积大于 50% LCD 子像素面积, 且透过 ND5%遮盖是可见的.

3.5、ND card test method / ND 卡检验方法:

Hold the ND card about 5cm above the display area, with your eyes 30-40cm away from the panel, and observe for 2~3 seconds

在显示区域上方大约 5cm 处握住 ND 卡，眼睛距离面板 30-40cm，观察 2~3 秒.

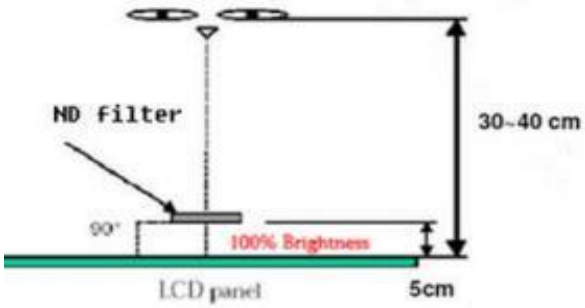

3.6、Surface substances that can be cleaned are not considered defects (e.g. finger prints on the protective film, dust particles)

可以被清洁干净的表面物质不视为缺陷 (如保护膜上的手指印，尘粒) .

3.7、Defects that can be covered by the material and are not visible to the eye, and do not affect the function and use are not considered defects

能被物料覆盖目视不可见，且不影响功能与使用的缺陷不视为缺陷.

3.8、AA shows that damage to the glass outside the area does not affect the effective line and does not expand the loss is acceptable

AA 显示区域以外的玻璃损伤，不影响有效线路和不会在扩大损失的是可以接受的.

3.9、Issues not specified or defined in this document shall be dealt with through friendly negotiation between the parties / 本文件中未规定或定义的问题，双方友好协商处理.

4.0、Inspection standards /检验标准:

4.1、Structural size standards / 结构尺寸标准:

Measurement items /测量项目		Specification /规格	Remark /备注
Name/名称	Unit /单位	Tolerance /公差	
Outside dimension：Length 尺寸：长	mm /毫米	0.10mm~0.3mm	Please refer to the product specification for detailed dimensions and tolerances 详细的尺寸规格和公差请参考产品规格书
Outside dimension：Width 尺寸：宽	mm /毫米	0.10mm~0.3mm	
Outside dimension：Thickness 尺寸：厚	mm /毫米	0.20mm~0.50mm	

4.2、Appearance Inspection standards:

(D ： diameter, W ： width, L ： length, N ： quantity, DS ： spacing)

Material 检验区域	Inspection items 检验项目	Product size 适用尺寸	Inspection standards 检验规格	Category 缺陷类别	
LCD	ITO	Full size 全尺寸	ITO can't open circuit, short circuit, ITO notch cannot exceed 70% of width. ITO 不能有开路和短路，ITO 缺口不能超过宽度的 70%.	MA	
	Corners broken 崩边/崩角	Full size 全尺寸	1、It cannot affect the appearance of valid routes and functions; 不能影响有效线路和功能外观.	MA	
			2、There must be no extensible rips 不能有可延伸性裂纹.	MA	
Silicone 硅胶	Silicone coating 硅胶涂布	Full size 全尺寸	1、The height cannot exceed the LCD CF surface / 高度不能超过 LCD CF 面.		MI
			2、No overflow and lack of glue / 不能溢胶和缺胶.		MI
			3、Silicone cannot cover POL and FPC/ 硅胶不能覆盖到 POL 和 FPC.		MI

Material 检验区域	Inspection items 检验项目	Product size 适用尺寸	Inspection standards 检验规格	Category 缺陷类别	
PCBA FPC Connector 连接器	Appearance 表面外观	Full size 全尺寸	1.FPC is not allowed to have drape/bubble/fold / 不允许有披锋/气泡/褶皱.		MI
			2.Surface scratches do not allow copper leakage / 表面划伤不允许出现漏铜.	MA	
			3.Cracking is not allowed / 不允许破裂.	MA	
			4.Gold finger oxidation is not allowed 不允许金手指氧化.	MA	
			5.Chromatic aberration is not allowed 不允许出现色差.	MA	
	Components 元器件	Full size 全尺寸	1. Damage, missing parts, and incorrect models are not allowed 不允许损伤、缺件、型号错误.	MA	
			2.Components need to be insulated with high temperature adhesive (unless not required by the drawings) / 元器件需要有高温胶绝缘保护（除非图纸无要求）.		MI
	Weld 焊接	Full size 全尺寸	1. False soldering, virtual soldering, and tinning are not allowed 不允许假焊、虚焊、连锡.	MA	
			2. No solder bead residue is allowed 不允许有锡珠残留.		MI
			3.The pads need to be glued with high temperature (unless not required by the drawings) / 焊盘需贴高温胶（除非图纸无要求）.		MI
POL 偏光片	Scratches 划伤	Under 6 inches 6 寸以下	1.W≤0.05mm；L≤5mm，Ignore（忽略）. 2.0.05mm＜W≤0.10mm ; L≤5mm ; N≤2; DS≥10mm. 3.0.10mm＜W；5mm＜L，Not allowable（不允许）.		MI
		6~10.0 inches 6 寸~10.0 寸	1.W≤0.07mm；L≤5mm，Ignore（忽略）. 2.0.07mm＜W≤0.12mm ; L≤10mm ; N≤3 ; DS≥10mm. 3.0.12mm＜W；10mm＜L，Not allowable（不允许）.		MI
		More than 10 inches 10 寸以上	1.W≤0.10mm；L≤5mm，Ignore（忽略）. 2.0.10mm＜W≤0.15mm ; L≤10mm ; N≤4 ; DS≥10mm. 3.0.15mm＜W；10mm＜L，Not allowable（不允许）.		MI

Material 检验区域	Inspection items 检验项目	Product size 适用尺寸	Inspection standards 检验规格	Category 缺陷类别	
POL 偏光片	Bubbles	Under 6 inches 6 寸以下	1.D≤0.15mm，Ignore（忽略）. 2.0.15mm＜D≤0.30mm；N≤2；DS≥10mm. 3.D＞0.30mm，Not allowable（不允许）.		MI
		More than 6 inches 6 寸以上	1.D≤0.20mm，Ignore（忽略）. 2.0.20mm＜D≤0.40mm；N≤3；DS≥10mm. 3.D＞0.40mm，Not allowable（不允许）.		MI
	Bubbles around the edges 边缘气泡	Full size 全尺寸	1.Within 1/2BM of the display area, it is not allowed 显示区往外 1/2BM 区域内，不允许. 2.The display area is 1/2 outside the BM area, and it is not controlled 显示区往外 1/2BM 区域以外，不管控.		MI
	Point defects Embossing	Under 6 inches 6 寸以下	1.D≤0.15mm，Ignore（忽略）. 2.0.15mm＜D≤0.30mm；N≤2；DS≥10mm. 3.D＞0.30mm，Not allowable（不允许）.		MI
		6~10.0 inches 6 寸~10.0 寸	1.D≤0.20mm，Ignore（忽略）. 2.0.20mm＜D≤0.40mm；N≤3；DS≥10mm. 3.D＞0.40mm，Not allowable（不允许）.		MI
		More than 10 inches 10 寸以上	1.D≤0.25mm，Ignore（忽略）. 2.0.25mm＜D≤0.50mm；N≤4；DS≥10mm. 3.D＞0.50mm，Not allowable（不允许）.		MI
	Dirty 脏污	Full size 全尺寸	Dirt, finger prints, etc. are not allowed 不允许有脏污、手指印等.		MI
	Warping 起翘	Full size 全尺寸	Not allowed 不允许.		MI
	Paste offset 贴附偏位	Full size 全尺寸	It is not allowed to exceed the patch tolerance required by the drawing; After TP lamination, it is not allowed to leak the edges of the polarizer 不允许超出图纸要求的贴片公差；在 TP 贴合后不允许漏偏光片边缘.		MI
	Angle mistake 角度错误	Full size 全尺寸	Not allowed 不允许.	MA	
	Mixture 混料	Full size 全尺寸	Not allowed 不允许.	MA	

Material 检验区域	Inspection items 检验项目	Product size 适用尺寸	Inspection standards 检验规格	Category 缺陷类别	
TP	Scratches 划伤	Under 6 inches 6 寸以下	1.W≤0.05mm；L≤5mm，Ignore（忽略）. 2.0.05mm＜W≤0.10mm；L≤5mm；N≤2；DS≥10mm. 3.0.10mm＜W；5mm＜L，Not allowable（不允许）. 4.There is a feeling scratch，Not allowable 有感划伤，不允许.		MI
		6~10.0 inches 6 寸~10.0 寸	1.W≤0.07mm；L≤5mm，Ignore（忽略）. 2.0.07mm＜W≤0.12mm；L≤10mm；N≤3；DS≥10mm. 3.0.12mm＜W；10mm＜L，Not allowable（不允许）. 4.There is a feeling scratch，Not allowable 有感划伤，不允许.		MI
		More than 10 inches 10 寸以上	1.W≤0.10mm；L≤5mm，Ignore（忽略）. 2.0.10mm＜W≤0.15mm；L≤10mm；N≤4；DS≥10mm. 3.0.15mm＜W；10mm＜L，Not allowable（不允许）. 4.There is a feeling scratch，Not allowable 有感划伤，不允许.		MI
	Black dots white dots 黑点/白点	Under 6 inches 6 寸以下	1.D≤0.15mm，Ignore（忽略）. 2.0.15mm＜D≤0.30mm；N≤2；DS≥10mm. 3.D＞0.30mm，Not allowable（不允许）.		MI
		6~10.0 inches 6 寸~10.0 寸	1.D≤0.20mm，Ignore（忽略）. 2.0.20mm＜D≤0.40mm；N≤3；DS≥10mm. 3.D＞0.40mm，Not allowable（不允许）.		MI
		More than 10 inches 10 寸以上	1.D≤0.25mm，Ignore（忽略）. 2.0.25mm＜D≤0.50mm；N≤4；DS≥10mm. 3.D＞0.50mm，Not allowable（不允许）.		MI
	OCA Bubbles 气泡	Full size 全尺寸	Not allowed 不允许.		MI
	Corners broken 崩边/崩角	Full size 全尺寸	1.Product front /产品正面：Edge and corner chipping is not allowed / 崩角、崩边不允许 2.Product back /产品背面: X≤ 0.5 , Y≤0.5，Z≤1/2T；N≤4；DS≥10mm.	MA	
	Silk screen 丝印	Full size 全尺寸	The silk screen is clear, complete and correct 丝印清晰、完整、内容正确.		MI

Material 检验区域	Inspection items 检验项目	Product size 适用尺寸	Inspection standards 检验规格	Category 缺陷类别	
TP	Dirty 脏污	Full size 全尺寸	Uncleanable dirt，Not allowable. 不可擦拭的脏污，不允许.		MI
	Broken 破损	Full size 全尺寸	Not allowable. 不允许.		MI
	Ink color aberration 油墨色差	Full size 全尺寸	ΔE>1，Not allowable（不允许）.		MI
	Cover pinholes 针孔	Full size 全尺寸	1.D≤0.20mm , N≤2 , DS≥10mm，allowable 2.D > 0.20mm，intensive pinholes（密集型针孔），Not allowable（不允许）.		MI
	Paint off 掉漆	Full size 全尺寸	Touch-up on the back of the cover is allowed, and the touch-up area cannot exceed 2.0mm in diameter / 允许在盖板背面补漆，补漆面积不能超过直径 2.0mm.		MI
BL 背光	Backlight separation 背光分离	Full size 全尺寸	Not allowable 不允许.		MI
	Deformed 变形	Full size 全尺寸	Measured using a plug gauge，If the deformation exceeds 0.3mm, NG is judged 使用塞规测量，形变超过 0.3mm，判定 NG.		MI
	Iron frame Oxidation /abscission 铁框氧化/脱落	Full size 全尺寸	Not allowable 不允许.		MI
	Dirt/adhesive residue/solder beads 脏污/残胶/锡珠	Full size 全尺寸	Not allowable 不允许.		MI
	Inkjet/barcode/ QR code 喷码/条码/二维码	Full size 全尺寸	The inkjet code is clear and complete, the barcode and QR code can be scanned normally, and the content and format meet the requirement / 喷码清晰完整、条码和二维码可正常扫描，内容和格式与要求相符.		MI
	Auxiliary materials 辅料	Full size 全尺寸	Accessories (vinyl, double-sided tape, insulating glue, etc.) are not allowed to be missed, misguided, defective, etc 辅料（黑胶、双面胶、绝缘胶等）不允许有漏贴、贴偏、残缺等.		MI

4.3、Functional inspection standards:

(D : diameter, W : width, L : length, N : quantity, DS : spacing)

Material 检验区域	Inspection items 检验项目	Product size 适用尺寸	Inspection standards 检验规格	Category 缺陷类别	
Display Screen 模组	Light leakage / Mura 漏光/ Mura	Full size 全尺寸	1.Use ND5% filter masking, visual invisibility is OK 使用 ND5%遮盖，目视不可见即为 OK. 2.If necessary, sign off on the sample 必要时，签限定样.		MI
	Brightness uniformity 亮度均匀性	Full size 全尺寸	Brightness uniformity < 85.0%，Not allowable 亮度均匀性 < 85.0%，不允许.	MA	
	LCD bright spots/dark spots 玻璃亮点/暗点	Under 6 inches 6 寸以下	1.D≤0.10mm，Ignore（忽略）. 2.0.10mm < D≤0.20mm；N≤2；DS≥10mm. 3.D > 0.20mm，Not allowable（不允许）.		MI
		6~10.0 inches 6 寸~10.0 寸	1.D≤0.15mm，Ignore（忽略）. 2.0.15mm < D≤0.30mm；N≤3；DS≥10mm. 3.D > 0.30mm，Not allowable（不允许）.		MI
		More than 10 inches 10 寸以上	1.D≤0.20mm，Ignore（忽略）. 2.0.20mm < D≤0.40mm；N≤4；DS≥10mm. 3.D > 0.40mm，Not allowable（不允许）.		MI
	Backlight black dots/white dots 背光黑点/白点	Under 6 inches 6 寸以下	1.D≤0.15mm，Ignore（忽略）. 2.0.15mm < D≤0.30mm；N≤2；DS≥10mm. 3.D > 0.30mm，Not allowable（不允许）.		MI
		6~10.0 inches 6 寸~10.0 寸	1.D≤0.20mm，Ignore（忽略）. 2.0.20mm < D≤0.40mm；N≤3；DS≥10mm. 3.D > 0.40mm，Not allowable（不允许）.		MI
		More than 10 inches 10 寸以上	1.D≤0.25mm，Ignore（忽略）. 2.0.25mm < D≤0.50mm；N≤4；DS≥10mm. 3.D > 0.50mm，Not allowable（不允许）.		MI
	Linear foreign bodies 线状异物	Under 6 inches 6 寸以下	1.W≤0.05mm；L≤5mm，Ignore（忽略）. 2.0.05mm < W≤0.10mm ; L≤5mm ; N≤2; DS≥10mm. 3.0.10mm < W；5mm < L，Not allowable（不允许）.		MI
		6~10.0 inches 6 寸~10.0 寸	1.W≤0.07mm；L≤5mm，Ignore（忽略）. 2.0.07mm < W≤0.12mm ; L≤10mm ; N≤3 ; DS ≥10mm. 3.0.12mm < W；10mm < L，Not allowable（不允许）.		MI
		More than 10 inches 10 寸以上	1.W≤0.10mm；L≤5mm，Ignore（忽略）. 2.0.10mm<W≤0.15mm ; L≤10mm ; N≤4 ; DS ≥10mm. 3.0.15mm < W；10mm < L, Not allowable（不允许）.		MI

Material 检验区域	Inspection items 检验项目	Product size 适用尺寸	Inspection standards 检验规格	Category 缺陷类别	
Display Screen 模组	White/Black print 白印/黑印	Full size 全尺寸	Use ND5% filter masking, visual invisibility is OK 使用 ND5%遮盖，目视不可见即为 OK.		MI
	Interference pattern/Newton pattern 干涉纹/牛顿纹	Full size 全尺寸	Not allowable 不允许.		MI
	Membranes displacement 膜材移位	Full size 全尺寸	Not allowable 不允许.		MI
	Color blocks 色斑	Full size 全尺寸	Use ND5% filter masking, visual invisibility is OK /使用 ND5%遮盖，目视不可见即为 OK.		MI
	Display abnormal 画异	Full size 全尺寸	Not allowable 不允许.	MA	
	No display 无显示	Full size 全尺寸	Not allowable 不允许.	MA	
	Line/Missing Drawing 线条/缺画	Full size 全尺寸	Not allowable 不允许.	MA	
	Splash screen 闪屏	Full size 全尺寸	Not allowable 不允许.	MA	
	LCD grid LCD 网格	Full size 全尺寸	Not allowable 不允许.	MA	
	Afterimage 残影	Full size 全尺寸	Not allowable 不允许.	MA	
	Wrong viewing angle 可视角错误	Full size 全尺寸	Not allowable 不允许.	MA	
TP	No touch 无触摸	Full size 全尺寸	Not allowable 不允许.	MA	
	Touch the jump point 触摸跳点	Full size 全尺寸	Not allowable 不允许.	MA	
	Touch not sensitive 触摸不灵敏	Full size 全尺寸	Not allowable 不允许.	MA	