Request information

PRODUCT SPECIFICATION

TFT-LCD MODULE

Module No: 100312-01

☑ Preliminary Specification

☐ Approval Specification

Designed by	Checked by	Approved by

Final Approval by Customer

Approved by	Comment

For more information, contact us:

WWW.DCLTEK.COM | 1-800-407-8917 | SALES@DCLTEK.COM

※The specification of “TBD” should refer to the measured value of sample . If there is difference between the design specification and measured value, we naturally shall negotiate and agree to solution with customer.

This document contains confidential and proprietary information of DCL Technologies, Inc. It is provided solely for the recipient's evaluation and may not be reproduced, disclosed, or distributed, in whole or in part, without the prior written consent of DCL Technologies, Inc.

Revision Record

REV NO.	REV DATE	CONTENTS	Note
V0	2023-2-1	NEW	

1. Numbering System

2. TFT General Information

ITEM	STANDARD VALUES	UNITS
LCD type	5.0”TFT	--
Dot arrangement	800(RGB)×480	dots
Color filter array	RGB vertical stripe	--
Display mode	IPS / Transmissive / Normally Black	--
Viewing Direction	80/80/80/80	--
LCM Module size	120.25(W)×75.40(H)×2.50(T)	mm
Active area	108.00(W)×64.80(H)	mm
Viewing Direction	ALL FULL	--
Dot pitch	0.077(H) x0.231(V)	mm
Interface	24bit RGB	--

3. Mechanical Drawing

This document contains confidential and proprietary information of DCL Technologies, Inc. It is provided solely for the recipient's evaluation and may not be reproduced, disclosed, or distributed, in whole or in part, without the prior written consent of DCL Technologies, Inc.

Front View

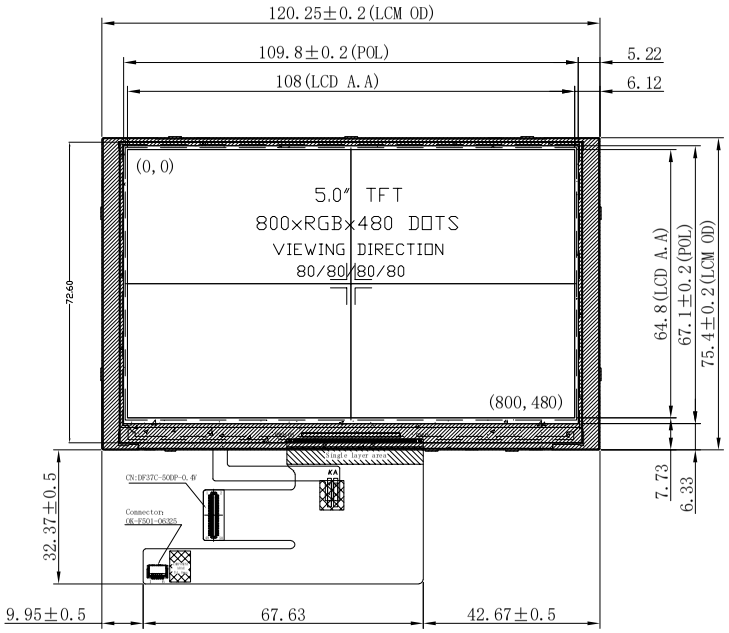

Side View

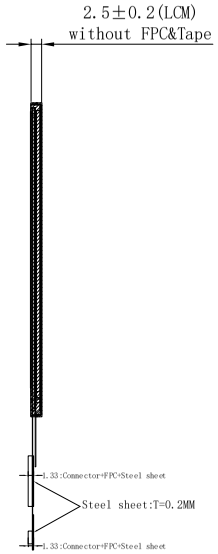

Back View

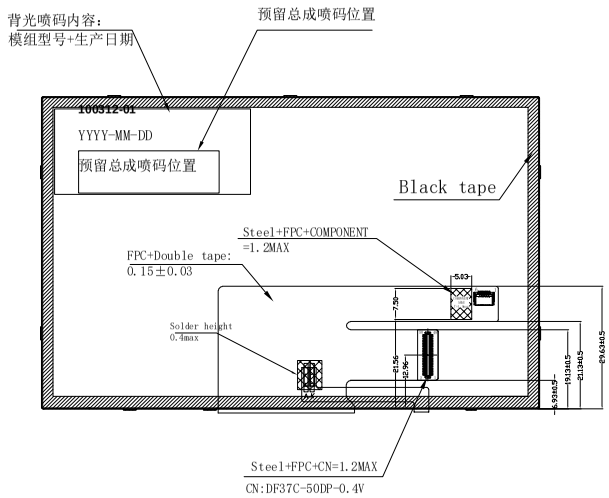

PIN	SYMBOL	PIN	SYMBOL
1	NC	26	G6
2	A	27	G5
3	A	28	G4
4	K	29	G1
5	K	30	G3
6	GND	31	G0
7	NC	32	G2
8	VCI	33	B7
9	VCI	34	NC
10	/RESET	35	B6
11	VSYNC	36	SDA
12	HSYNC	37	B5
13	GND	38	SCK
14	PCLK	39	B4
15	GND	40	CTP_VCC
16	DE	41	B3
17	R7	42	/CS
18	R6	43	B2
19	R5	44	CTP_RST
20	R4	45	B1
21	R3	46	CTP_INT
22	R2	47	B0
23	R1	48	CTP_SCL
24	R0	49	CTP_SDA
25	G7	50	GND

CTP NOTE:

1. G+G+FPC+OCA
   LENS GLASS: 1.1mm
   SENSOR GLASS: 0.55mm
   IC: FT5426
2. Operation Voltage: 2.8V-3.3 V
3. Transmittance: ≥82%
4. The cover hardness: 6H

Notes:

1. Display : 5.0", TFT
2. Resolution: 800xRGBx480
3. LCD Viewing Direction: ALL,
4. Display Mode: Normally Black
5. LCM Bringhtness: 380cd/m²(TYP)
6. unmark Tolerance:±0.2
7. OPERATING TEMP: -20° C~ +70° C
8. STORAGE TEMP: -30° C~ +80° C
9. Requirements on Environmental Protection: ROHS

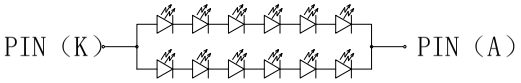

IF=40mA,VF=18.6V(TYP)

REV	DESCRIPTION	DATE	NAME
3			
2			
1			
0	NEW	2022.12.30	

DCLTEK

SCALE:1/1	UNIT:mm	PAGE:1/1		Approve	Check	Drawn
Part No:	100312-01		VER:V0			
Customer No:						

4. Interface Description

PIN NO.	PIN NAME	DESCRIPTION
1	NC	NC
2	A	Power supply for backlight anode input terminal.
3	A	Power supply for backlight anode input terminal.
4	K	Power supply for backlight cathode input terminals.
5	K	Power supply for backlight cathode input terminals.
6	GND	Ground
7	NC	NC
8	VCI	TFT and CTP power supply input.
9	VCI	TFT and CTP power supply input.
10	/RESET	Reset signal input terminal, active at ‘L’.
11	VSYNC	Vertical Sync Input
12	HSYNC	Horizontal Sync Input
13	GND	Ground
14	PCLK	Dot Data Clock
15	GND	Ground
16	DE	Data Enable Input
17	R7	Red data bus.
18	R6	
19	R5	
20	R4	
21	R3	
22	R2	
23	R1	
24	R0	
25	G7	Green data bus.
26	G6	
27	G5	
28	G4	
29	G1	
30	G3	
31	G0	
32	G2	

33	B7	Blue data bus.
34	NC	NC
35	B6	Blue data bus.
36	SDA	SPI Interface Data.
37	B5	Blue data bus.
38	SCL	SPI Interface Data Clock.
39	B4	Blue data bus.
40	NC	NC
41	B3	Blue data bus.
42	/CS	Chip select signal, Active “L”
43	B2	Blue data bus.
44	CTP_RST	CTP reset line.
45	B1	Blue data bus.
46	CTP_INT	CTP interrupt line.
47	B0	Blue data bus.
48	CTP_SCL	CTP I2C clock line.
49	CTP_SDA	CTP I2C data line.
50	GND	Ground

5. Absolute Maximum Ratings

Item	Symbol	Min.	Max.	Unit
Analog Supply Voltage	VCI	-0.3	3.6	V
Input Voltage	Vin	-0.3	VCI+0.5	V
Operating Temperature	T_{OP}	-20	70	°C
Storage Temperature	T_{ST}	-30	80	°C
Storage Humidity	HD	20	90	%RH

6. DC Characteristics

Item	Symbol	Min.	Typ.	Max.	Unit	Remark
Analog Supply Voltage	VCI	2.5	2.8	3.3	V	-
Input High Voltage	V_{IH}	0.7VCI	-	VCI	V	Digital input pins
Input Low Voltage	V_{IL}	GND	-	0.3VCI	V	Digital input pins
Output High Voltage	V_{OH}	0.8VCI	-	VCI	V	Digital output pins
Output Low Voltage	V_{OL}	GND	-	0.2VCI	V	Digital output pins
I/O Leak Current	I_{LI}	-1.0	-	1.0	uA	-

7. Timing Characteristics

7.1 RGB Interface Characteristics

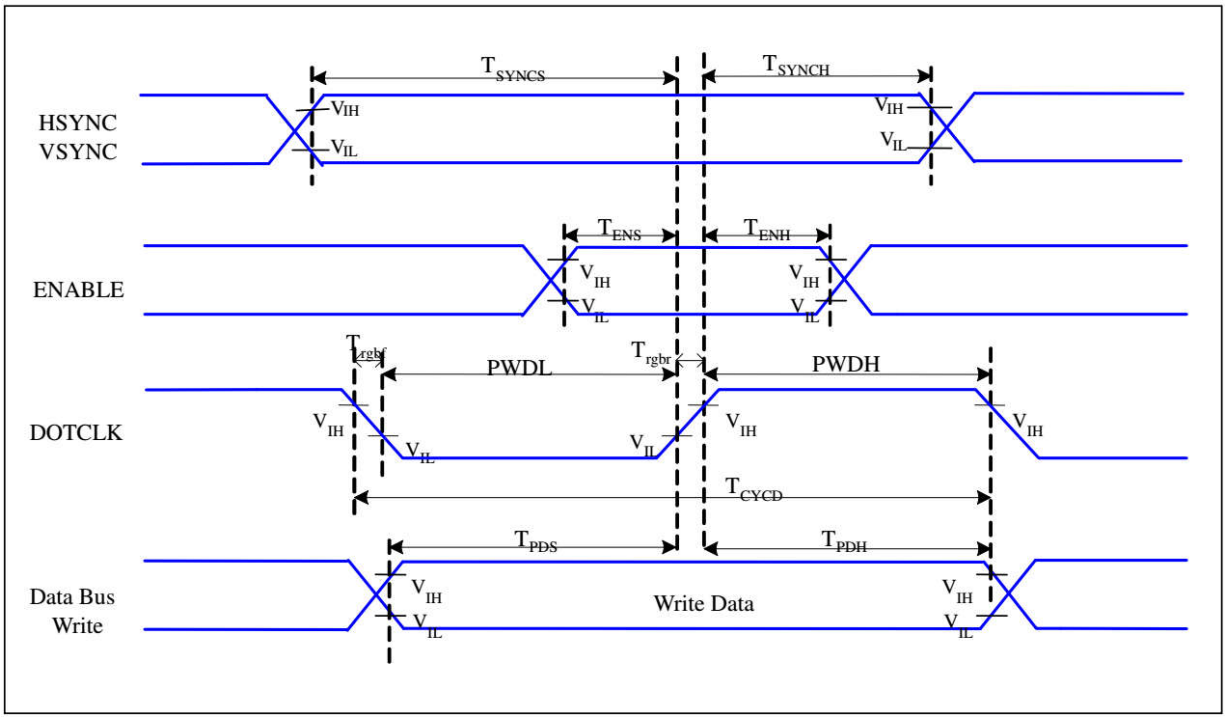

Signal	Symbol	Parameter	MIN	MAX	Unit	Description
HSYNC, VSYNC	T_{SYNCS}	VSYNC, HSYNC Setup Time	5	-	ns	
ENABLE	T_{ENS}	Enable Setup Time	5	-	ns	
	T_{ENH}	Enable Hold Time	5	-	ns	
DOTCLK	PWDH	DOTCLK High-level Pulse Width	15	-	ns	
	PWDL	DOTCLK Low-level Pulse Width	15	-	ns	
	T_{CYCD}	DOTCLK Cycle Time	33	-	ns	
	Trghr, Trghf	DOTCLK Rise/Fall time	-	15	ns	
DB	T_{PDS}	PD Data Setup Time	5	-	ns	
	T_{PDH}	PD Data Hold Time	5	-	ns	

7.2 Serial Interface Characteristics (3-line serial)

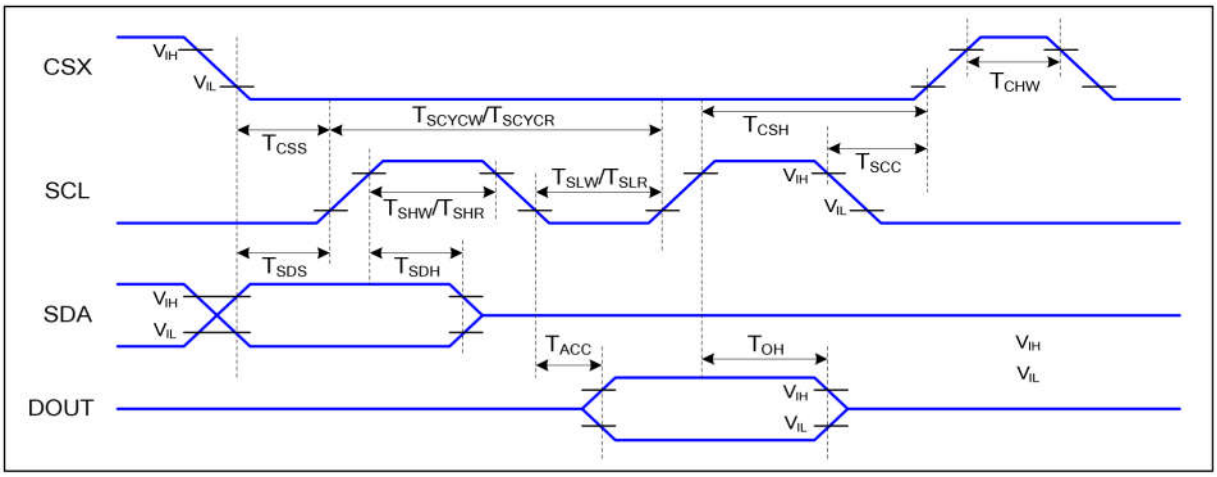

Signal	Symbol	Parameter	Min	Max	Unit	Description
CSX	T_{CSS}	Chip select setup time (write)	15		ns	
	T_{CSH}	Chip select hold time (write)	15		ns	
	T_{CSS}	Chip select setup time (read)	60		ns	
	T_{SCC}	Chip select hold time (read)	60		ns	
	T_{CHW}	Chip select "H" pulse width	40		ns	
SCL	T_{SCYCW}	Serial clock cycle (Write)	66		ns	
	T_{SHW}	SCL "H" pulse width (Write)	15		ns	
	T_{SLW}	SCL "L" pulse width (Write)	15		ns	
	T_{SCYCR}	Serial clock cycle (Read)	150		ns	
	T_{SHR}	SCL "H" pulse width (Read)	60		ns	
	T_{SLR}	SCL "L" pulse width (Read)	60		ns	
SDA (DIN)	T_{SDS}	Data setup time	10		ns	
	T_{SDH}	Data hold time	10		ns	

7.3 Reset Timing Characteristics

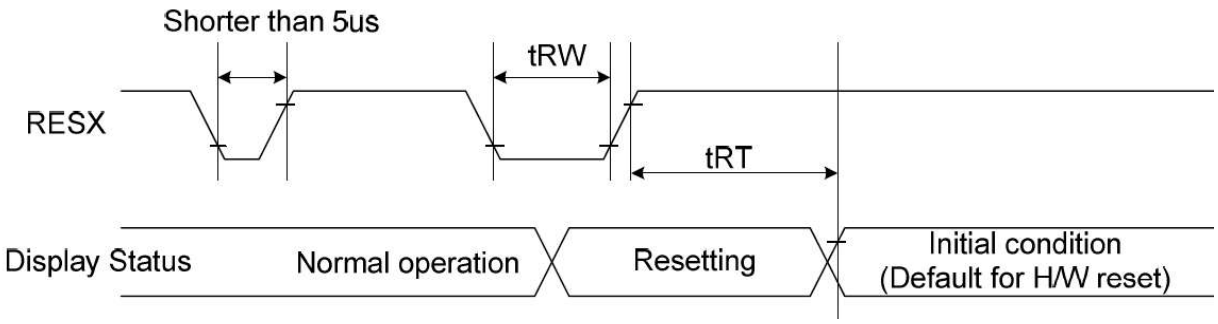

Signal	Symbol	Parameter	Min	Max	Unit
RESX	tRW	Reset pulse duration	10		uS
	tRT	Reset cancel		5 (note 1,5)	mS
				120 (note 1,6,7)	mS

8. Backlight Charasterics

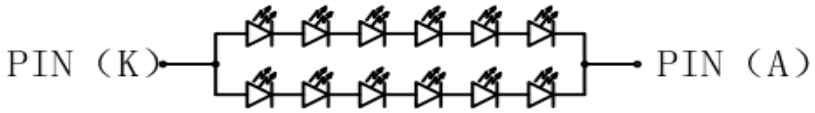

IF=40mA, VF=18. 6V (TYP)

Item	Symbol	MIN	TYP	MAX	UNIT	Test Condition
Supply Voltage	Vf	-	18.6	-	V	If=40mA
Supply Current	If	-	40	-	mA	-
Luminous Intensity for LCM	-		380	-	Cd/m^2	If=40mA
Uniformity for LCM	-	80	-	-	%	If=40mA
Life Time	-	20000	-	-	Hr	If=40mA
Backlight Color	White					

9. Optical Characteristics

Parameter		Symbol	Condition	Min.		Max.	Unit	Remark
Viewing Angle Range	Horizontal	Θ_3	CR > 10	70	80	-	Deg.	Note 4.1
		Θ_9		70	80	-	Deg.	
	Vertical	Θ_{12}		70	80	-	Deg.	
		Θ_6		70	80	-	Deg.	
Contrast Ratio		CR	Θ = 0°	1000	1200	-		w/o APF @C Light Note 4.2/4.3
Cell Transmittance		Tr		4.15	4.9	-	%	
Reproduction of color		Rx	Θ = 0°	**0.595**	**0.625**	**0.655**		**With @C Light Note 4.4**
		Ry		**0.283**	**0.313**	**0.343**		
		Gx		**0.282**	**0.312**	**0.342**		
		Gy		**0.534**	**0.564**	**0.594**		
		Bx		**0.111**	**0.141**	**0.171**		
		By		**0.113**	**0.143**	**0.173**		
		Wx		**0.278**	**0.308**	**0.338**		
		Wy		**0.309**	**0.339**	**0.369**		
Color Gamut			Θ = 0°	**50**	**55**	**-**	**%**	
Response Time		Tr+Tf	Ta= 25° C Θ = 0°	-	30	40	ms	Note 4.5

Note 9.1: Viewing angle is the angle at which the contrast ratio is greater than 10. The viewing angles are determined for the horizontal or 3, 9 o'clock direction and the vertical or 6, 12 o'clock direction with respect to the optical axis which is normal to the LCD surface (see Figure 8).

<Figure 8. Viewing Angle Range Is Defined As Follows>

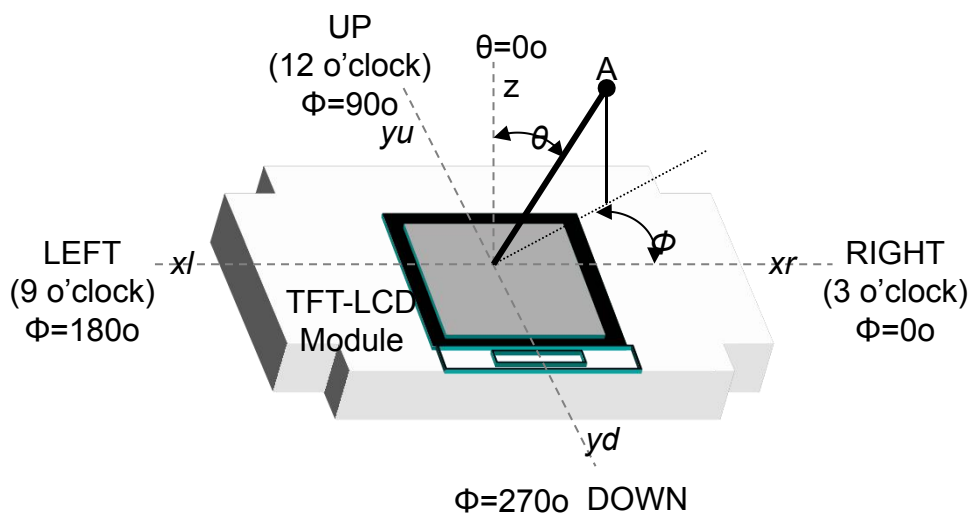

Note 9.2: Contrast measurements shall be made at viewing angle of Θ=0° and at the center of the LCD surface. Luminance shall be measured with all pixels in the view field set first to white, then to the dark (black) st ate. Luminance Contrast Ratio (CR) is defined mathematically.

10. Reliability Test Conditions And Methods

NO.	TEST ITEMS	TEST CONDITION	INSPECTION AFTER TEST
①	High Temperature Storage	80℃±2℃×96Hours	Inspection after 2~4hours storage at room temperature,the samples should be free from defects: 1,Air bublle in the LCD. 2,Sealleak. 3,Non-display. 4,Missing segments. 5,Glass crack. 6,Current IDD is twice higher than initial value. 7,The surface shall be free from damage. 8,The electric charateristic requirements shall be satisfied.
②	Low Temperature Storage	-30℃±2℃×96Hours	
③	High Temperature Operating	70℃±2℃×96Hours	
④	Low Temperature Operating	-20℃±2℃×96Hours	
⑤	Temperature Cycle(Storage)	-10℃ ⟺ 25℃ ⟺ 60℃ (30min) (5min) (30min) 1cycle Total 10cycle	
⑥	Damp Proof Test (Storage)	50℃±5℃×90%RH×96Hours	
⑦	Vibration Test	Frequency:10Hz~55Hz~10Hz Amplitude:1.5M X,Y,Z direction for total 3hours (Packing Condition)	
⑧	Drooping Test	Drop to the ground from 1M height one time every side of carton. (Packing Condition)	
⑨	ESD Test	Voltage:±8KV,R:330Ω,C:150PF,Air Mode,10times	

REMARK:
1,The Test samples should be applied to only one test item.
2,Sample side for each test item is 5~10pcs.
3,For Damp Proof Test,Pure water(Resistance＞10MΩ)should be used.
4,In case of malfunction defect caused by ESD damage,if it would be recovered to normal state after resetting,it would be judge as a good part.
5,EL evaluation should be excepted from reliability test with humidity and temperature:Some defects such as black spot/blemish can happen by natural chemical reaction with humidity and Fluorescence EL has.
6,Failure Judgment Criterion:Basic Specification Electrical Characteristic,Mechanical Characteristic,Optical Characteristic.

11. Inspection Standard

This standard apply to C-STN/TFT module

1. **Spot check plan：**

   According to spot check level Ⅱ,MIL-STD-105D Level Ⅱ,the rank of accept or reject is below:

   A 级：major non-conformance： AQL 0.65 minor non-conformance： AQL 1.

2. **Inspection condition：**

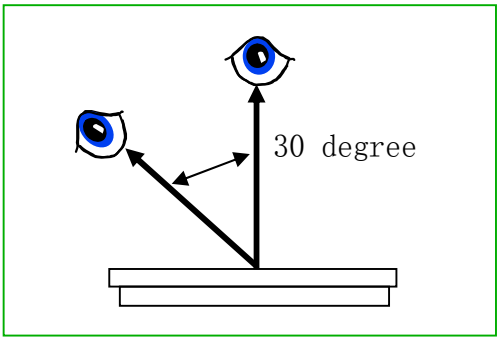

Under daylight lamp 20～40W，product distance inspector'eye 30cm,incline degree 30°。

3. **LCD area define：**

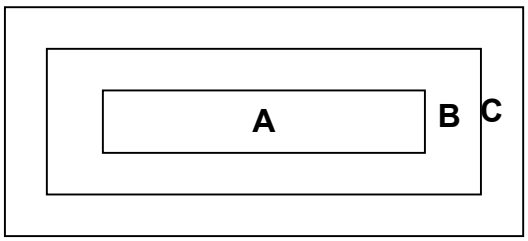

Area A：display area

Area B：VA area

Area C：out of VA area,not in sight after assemby

Remark :non-conformance at area C,but is OK that isn't influence raliability of product & assembly by customer.

4. Inspection standard

4.1 Major non-conformance

NO.	Item	Inspection standard	Rate
4.1.1	Function non-conformance	1) No display,display abnormaly 2) Miss line, short 3) B/L no function or function abnormaly 4) TP no function	major
4.1.2	miss	No matter miss what component	
4.1.3	Out of size	Module dimension out of spec	

4.2 Appearance non-conformance

<table>
<tr><th>NO.</th><th>Item</th><th>Inspection standard</th><th>Rate</th></tr>
<tr><td rowspan="2">4.2.1</td><td rowspan="2">Black or white spot（power on）</td><td>dot non-conformance define Φ
$\Phi = \frac{(x+y)}{2}$
 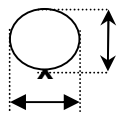
</td><td rowspan="2">Minor</td></tr>
<tr><td>A grade
<table>
<tr><th rowspan="2">area
size（mm）</th><th colspan="3">Most approve q’ty</th></tr>
<tr><th>A</th><th>B</th><th>C</th></tr>
<tr><td>Φ≤0.10</td><td colspan="2">ignore</td><td rowspan="5">ignore</td></tr>
<tr><td>0.10＜Φ≤0.15</td><td colspan="2">3</td></tr>
<tr><td>0.15＜Φ≤0.20</td><td colspan="2">2</td></tr>
<tr><td>0.20＜Φ≤0.25</td><td colspan="2">1</td></tr>
<tr><td>0.25＜Φ</td><td colspan="2">0</td></tr>
</table>
Most approve 4 damages, dot to dot ≥10mm</td></tr>
<tr><td>4.2.2</td><td>Black or white line（power on）</td><td>A grade
<table>
<tr><th colspan="2">Size(mm)</th><th colspan="3">Most approve q’ty</th></tr>
<tr><th>L(length）</th><th>W(width)</th><th>A</th><th>B</th><th>C</th></tr>
<tr><td>ignore</td><td>W≤0.03</td><td colspan="2">ignore</td><td rowspan="4">ignore</td></tr>
<tr><td>L≤5.0</td><td>0.03＜W≤0.05</td><td colspan="2">2</td></tr>
<tr><td>L≤3.0</td><td>0.05＜W≤0.07</td><td colspan="2">1</td></tr>
<tr><td></td><td>0.07＜W</td><td colspan="2">Treat with dot non-conformance</td></tr>
</table>
Most approve 3 damages, line to line ≥10mm</td><td>Minor</td></tr>
<tr><td>4.2.3</td><td>Polarizer position</td><td>1) polarizer attach meet drawing,disallow out of LCD.
2) polarizer must cover display area（special require unless）</td><td>Minor</td></tr>
</table>

<table>
<tr><td rowspan="3">4.2.4</td><td rowspan="3">LCD non-conformance</td><td>(i) crash at side（remark: S=ITO length）
 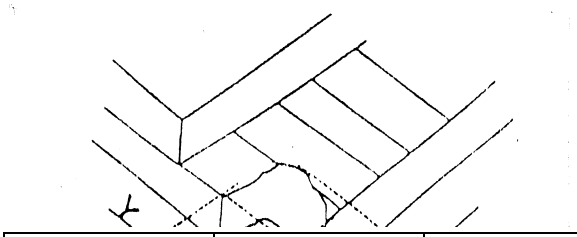

<table><tr><th>X</th><th>Y</th><th>Z</th></tr><tr><td>≤3.0</td><td>≤S</td><td>ignore</td></tr></table>Crash disallow extend to ITO or seal.</td><td rowspan="3">Minor</td><td rowspan="3"></td></tr>
<tr><td>(ii) commonly surface scathe
 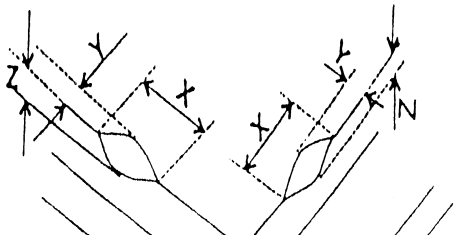

<table><tr><th>X</th><th>Y</th><th>Z</th></tr><tr><td>≤2.0</td><td><frame edge</td><td>ignore</td></tr></table></td></tr>
<tr><td>(iii) crack
Disallow extend crack
 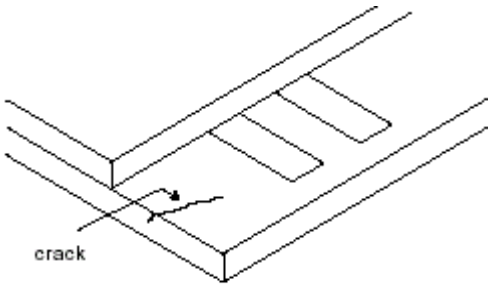
</td></tr>
<tr><td>4.2.5</td><td>Contrast voltage arp</td><td>VOP/Vlcd voltage of confirmed sample±0.15V</td><td>Minor</td><td></td></tr>
<tr><td>4.2.6</td><td>color</td><td>Color & luminance of module scope reference spec</td><td>Minor</td><td></td></tr>
<tr><td>4.2.7</td><td>Cross talk</td><td>Reference confirmed limit sample</td><td>Minor</td><td></td></tr>
</table>

12. Handling Precautions

12.1 Mounting method

The LCD panel of LTK LCD module consists of two thin glass plates with polarizes which easily be damaged. And since the module in so constructed as to be fixed by utilizing fitting holes in the printed circuit board.

Extreme care should be needed when handling the LCD modules.

12.2 Caution of LCD handling and cleaning

When cleaning the display surface, Use soft cloth with solvent [recommended below] and wipe lightly

- Isopropyl alcohol
- Ethyl alcohol

Do not wipe the display surface with dry or hard materials that will damage the polarizer surface.

Do not use the following solvent:

- Water
- Aromatics

Do not wipe ITO pad area with the dry or hard materials that will damage the ITO patterns

Do not use the following solvent on the pad or prevent it from being contaminated:

- Soldering flux
- Chlorine (Cl) , Salfur (S)

If goods were sent without being sili8con coated on the pad, ITO patterns could be damaged due to the corrosion as time goes on.

If ITO corrosion happen by miss-handling or using some materials such as Chlorine (Cl), Salfur (S) from customer, Responsibility is on customer.

12.3 Caution against static charge

The LCD module use C-MOS LSI drivers, so we recommended that you:

Connect any unused input terminal to Vdd or Vss, do not input any signals before power is turned on, and ground your body, work/assembly areas, assembly equipment to protect against static electricity.

12.4 packing

- Module employ LCD elements and must be treated as such.
- Avoid intense shock and falls from a height.
- To prevent modules from degradation, do not operate or store them exposed direct to sunshine or high temperature/humidity

12.5 Caution for operation

- It is an indispensable condition to drive LCD's within the specified voltage limit since the higher voltage then the limit cause the shorter LCD life.
- An electrochemical reaction due to direct current causes LCD's undesirable deterioration, so that the use of direct current drive should be avoided.
- Response time will be extremely delayed at lower temperature then the operating temperature range and on the other hand at higher temperature LCD's how dark color in them. However those phenomena do not mean malfunction or out of order with LCD's, which will come back in the specified operation temperature.
- If the display area is pushed hard during operation, some font will be abnormally displayed but it resumes normal condition after turning off once.
- A slight dew depositing on terminals is a cause for electro-chemical reaction resulting in terminal open circuit.

Usage under the maximum operating temperature, 50%Rh or less is required.

12.6 storage

In the case of storing for a long period of time for instance, for years for the purpose or replacement use, the following ways are recommended.

- Storage in a polyethylene bag with the opening sealed so as not to enter fresh air outside in it . And with no desiccant.
- Placing in a dark place where neither exposure to direct sunlight nor light's keeping the storage temperature range.
- Storing with no touch on polarizer surface by the anything else.
  [It is recommended to store them as they have been contained in the inner container at the time of delivery from us

12.7 Safety

- It is recommendable to crash damaged or unnecessary LCD's into pieces and wash off liquid crystal by either of solvents such as acetone and ethanol, which should be burned up later.
- When any liquid leaked out of a damaged glass cell comes in contact with your hands, please wash it off well with soap and water

13. Precaution For Use

13.1

A limit sample should be provided by the both parties on an occasion when the both parties agreed its necessity. Judgment by a limit sample shall take effect after the limit sample has been established and confirmed by the both parties.

13.2

On the following occasions, the handing of problem should be decided through discussion and agreement between responsible of the both parties.

- When a question is arisen in this specification
- When a new problem is arisen which is not specified in this specifications
- When an inspection specifications change or operating condition change in customer is reported to LTK LCD , and some problem is arisen in this specification due to the change
- When a new problem is arisen at the customer's operating set for sample evaluation in the customer site.

14. Packing Method

TBD