Request information

PRODUCT SPECIFICATION

TFT-LCD MODULE

Module No: 100303-01

☑ Preliminary Specification

☐ Approval Specification

Designed by	Checked by	Approved by

Final Approval by Customer

Approved by	Comment

For more information, contact us:

WWW.DCLTEK.COM | 1-800-407-8917 | SALES@DCLTEK.COM

※The specification of “TBD” should refer to the measured value of sample . If there is difference between the design specification and measured value, we naturally shall negotiate and agree to solution with customer.

This document contains confidential and proprietary information of DCL Technologies, Inc. It is provided solely for the recipient's evaluation and may not be reproduced, disclosed, or distributed, in whole or in part, without the prior written consent of DCL Technologies, Inc.

Document Revision History

Version	Contents	Date	Note
V0	NEW	2023.09.16	

1.0 General Specifications

NO	Item	Specification	Unit	Remark
1	LCD Size	4.3	inch	-
2	Panel Type	IPS	-	-
3	Resolution	800 x RGB x 480	pixel	-
4	Display Mode	Normally Black	-	-
5	Number of Colors	16.7M	-	-
6	Viewing Direction	ALL	-	-
7	LCM Module Size	104.96(H) ×66.66(V)×2.80(T)	mm	-
8	Panel Active Area	95.04 (H) × 53.86(V)	mm	Note
9	Pixel Pitch	0.1188 (W) x 0.1122 (H)	mm	Note
10	Interface	RGB	-	-

2.0 Outline Drawing

This document contains confidential and proprietary information of DCL Technologies, Inc. It is provided solely for the recipient's evaluation and may not be reproduced, disclosed, or distributed, in whole or in part, without the prior written consent of DCL Technologies, Inc.

Front View

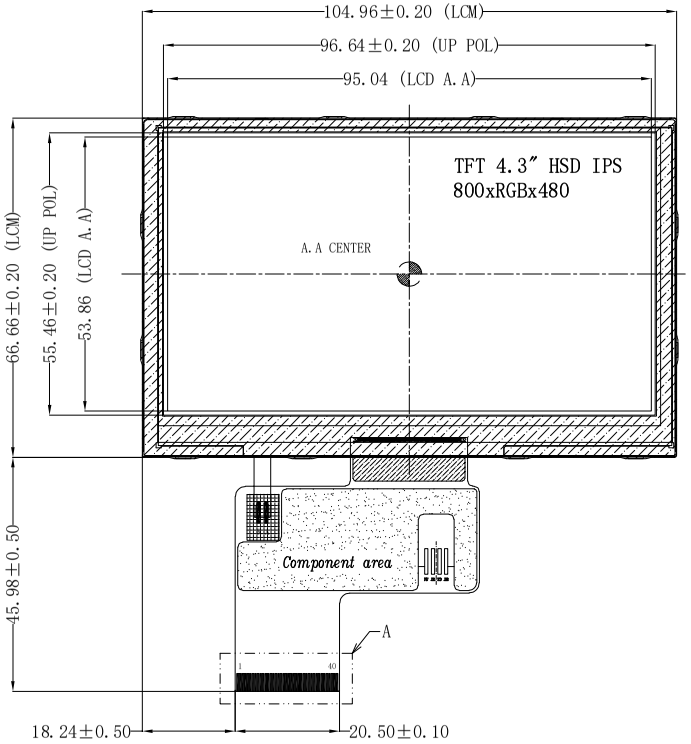

Side View

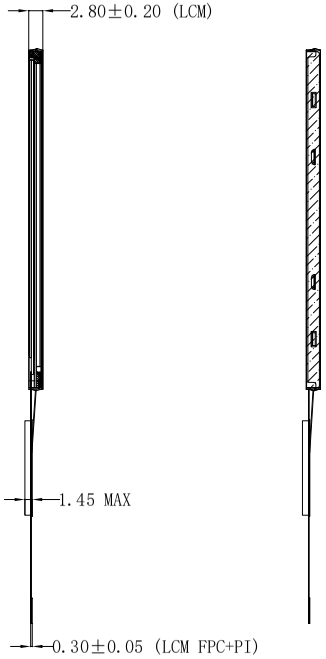

Back View

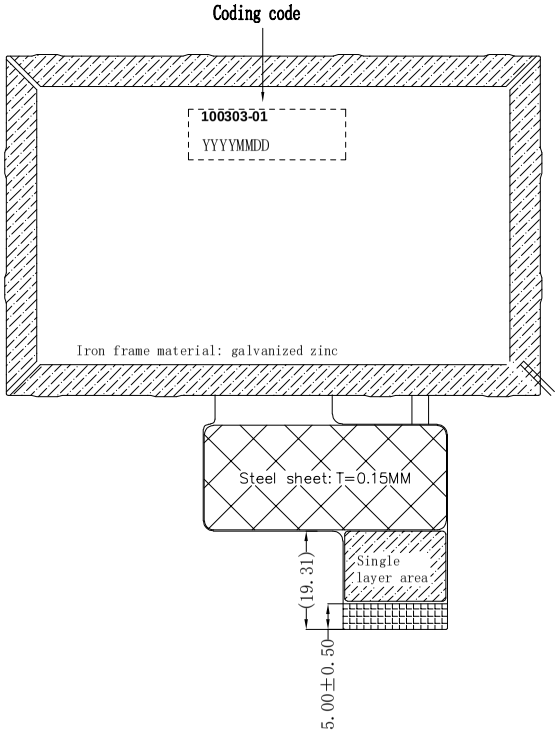

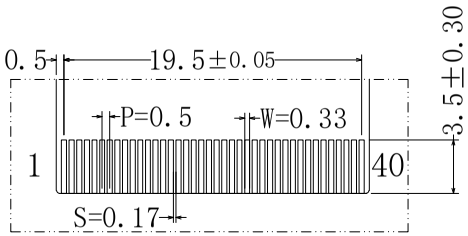

A SC 1:3

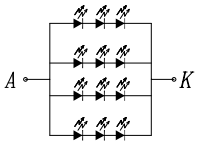

Vf=18V(TYP), If=80mA

TFT PIN

1	LEDK
2	LEDA
3	GND
4	VCC
5-12	R0-R7
13-20	G0-G7
21-28	B0-B7
29	GND
30	CLK
31	DISP
32	HSYNC
33	VSYNC
34	DEN
35	NC
36	GND
37	XR
38	YD
39	XL
40	YU

Notes:
1. Display: 4.3″,TFT
2. Resolution: 800*RGB*480
3. LCD Viewing Direction: ALL
4. Display Mode: Normally Black/Transmissive
5. LCM Brightness: 1200cd/m²(TYP), Uniformity≥80%
6. "*" Critical dimension, "( )" Reference dimension, unmark Tolerance:±0.2
7. Operating Temperature:-20℃~ +70℃
8. Storage Temperature:-30℃~ +80℃
9. Requirements on Environmental Protection: ROHS

REV	DESCRIPTION	DATE	NAME
3			
2			
1			
0	NEW	2023.09.16	

SCALE:1/1	UNIT:mm	PAGE:1/1		Approve	Check	Drawn
Part No:	100303-01		VER:V0			
Customer No:						

3.0 Interface Pin Connection

3.1 TFT LCD Module

Table 2: Pin assignment

Pin No.	Symbol	Description
1	LEDK	Backlight LED Cathode
2	LEDA	Backlight LED anode
3	GND	System Ground
4	VCC	Power supply for logic operation
5~12	R0~R7	Data bus
13~20	G0~G7	Data bus
21~28	B0~B7	Data bus
29	GND	System Ground
30	CLK	Pixel clock signal
31	DISP	Display on/off control
32	HSYNC	Horizontal Sync signal
33	VSYNC	Vertical Sync signal
34	DEN	Data Enable
35	NC	NC
36	GND	System Ground
37	XR	Touch Panel Control Pin
38	YD	Touch Panel Control Pin
39	XL	Touch Panel Control Pin
40	YU	Touch Panel Control Pin

4.0 Absolute Maximum Ratings

4.1 Electrical Absolute Rating

4.1.1 TFT LCD Module

Item	Symbol	Min.	Max.	Unit	Note
Power supply voltage	VDD	2.5	3.6	V	GND=0
Logic Signal Input Level	V_I	-0.3	DV_{DD} +0.3	V	

Note (1) Stresses above those listed under "Absolute Maximum Rating" may cause permanent damage to the device. These are stress ratings only. Functional operation of this device at indicated in the operational sections(6.1) of this specification.

4.2 Back-light Unit:

PARAMETER	Sympol	Min.	Typ.	Max.	Unit	Test Condition	Note
LED Current	IF	–	80	–	mA	–	–
LED Voltage	VF	–	18	–	V	IF=80mA	–
Luminance	LV	–	1200		cd/m2	IF=80mA	
Life Time		–	30000	–	Hr.	IF=80mA	–
Color	White						

Note (1) Permanent damage may occur to the LCD module if beyond this specification. Functional operation should be restricted to the conditions described under normal operating conditions.

(2)Ta=25±2℃

(3)Test condition: LED Current 80mA

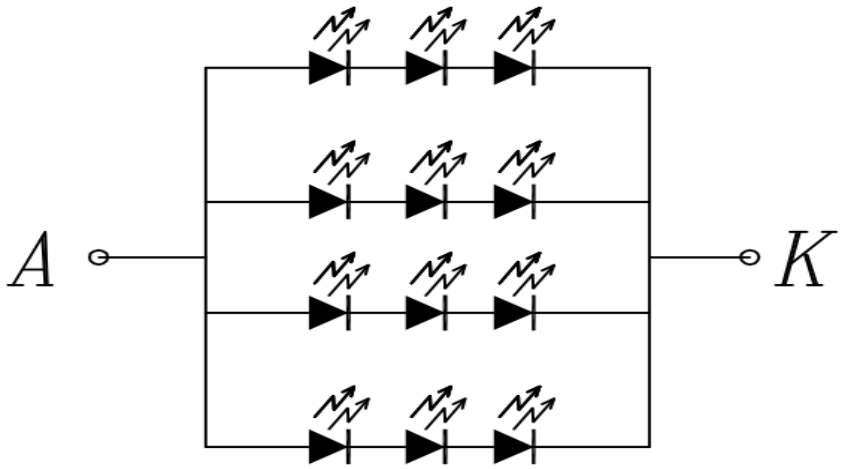

Vf=18V (TYP), If=80mA

5.0 Optical Characteristics

5.1 Optical specification

Item		Symbol	Condition	Min.	Typ.	Max.	Unit	Note
Contrast Ratio		CR	Θ=0 Normal viewing angle	640	800	—		(1)(2)(4)
Response time		Tr+ Tf		—	30	40	msec	(1)(3)
Color chromaticity (CIE1931)		White	W_x	-0.050	-	+0.050		(1)(4) CF Glass C light
			W_y		-			
		Red	Rx		-			
			Ry		-			
		Green	Gx		-			
			Gy		-			
		Blue	Bx		-			
			By		-			
Viewing angle	Hor.	Θ_L	CR>10	70	**80**	—		
		Θ_R		70	**80**	—		
	Ver.	Θ_U		70	**80**	—		
		Θ_D		70	**80**	—		
Transmittance (with polarizer)		T(%)		4.1	4.6	—		(5)
NTSC				45	50%	--	%	
Luminance Uniformity		YU		75			%	

5.2 Measuring Condition

- Measuring surrounding : dark room
- Ambient temperature : 25±2℃
- 30min. warm-up time.

5.3 Measuring Equipment

- TOPCON BM-7
- Measuring spot size : field 2°

Note (1) Definition of Vsat and Vth (at 20℃)

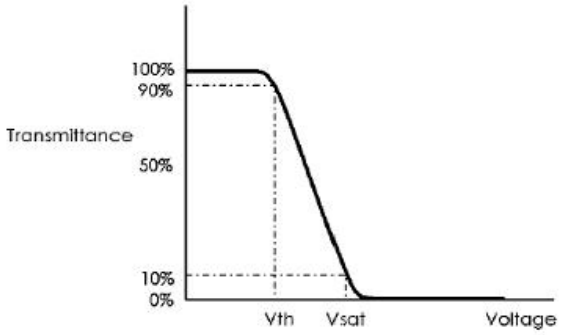

Note (2) Definition of Viewing Angle :

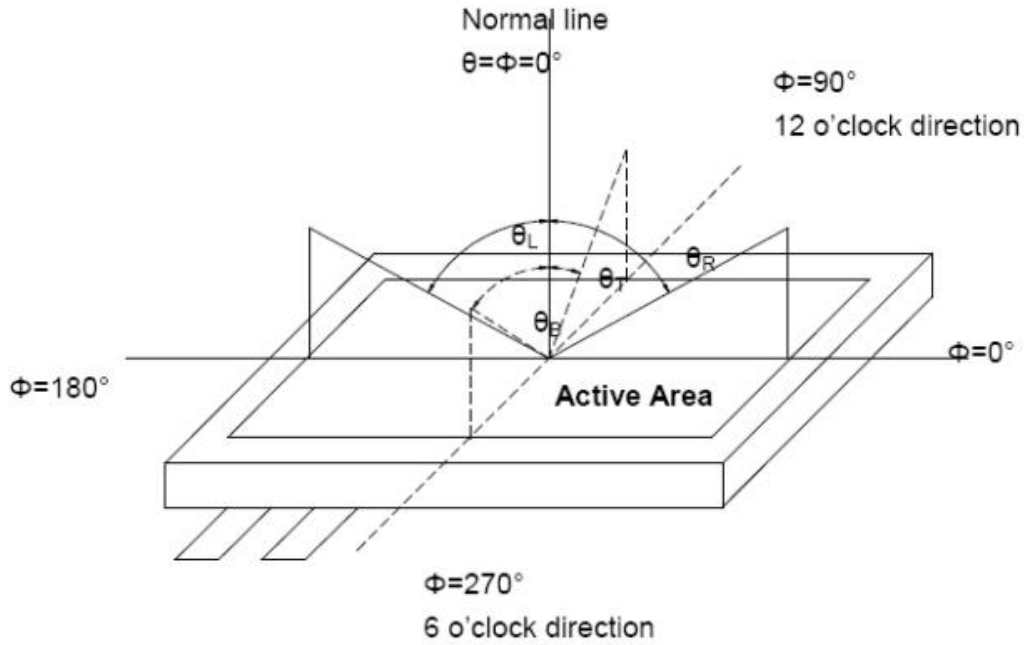

Note 3: Definition of response time:

The response time is defined as the LCD optical switching time interval between "White" state and "Black" state. Rise time (TON) is the time between photo detector output intensity changed from 90% to 10%. And fall time (TOFF) is the time between photo detector output intensity changed from 10% to 90%.

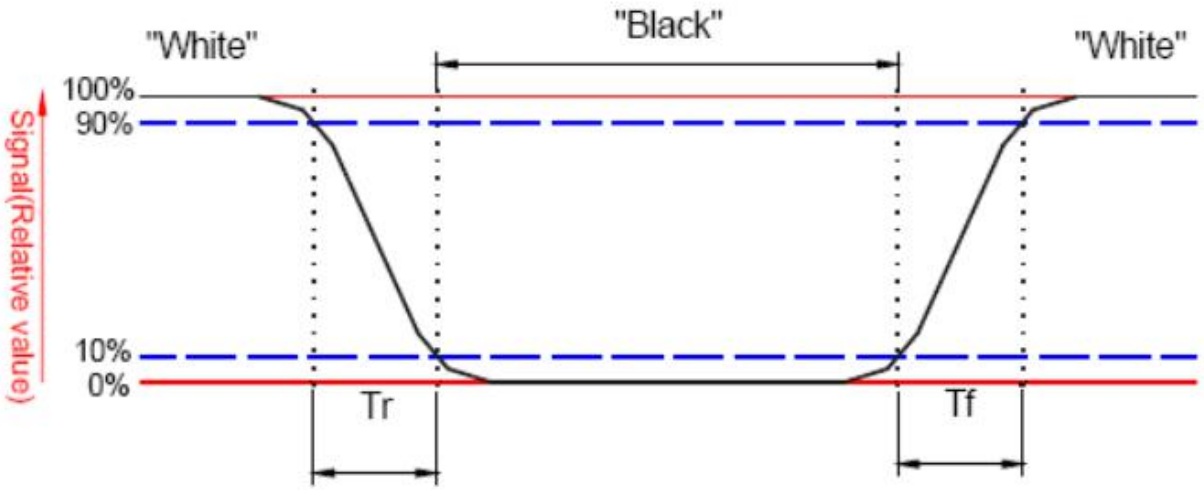

Note 4: Definition of contrast ratio:

Contrast ratio is calculated by the following formula.

$$\text{Contrast ratio (CR)} = \frac{\text{Brightness on the "white" state}}{\text{Brightness on the "black" state}}$$

Note 5: Definition of color chromaticity (CIE 1931)

Note 6: All input terminals LCD panel must be ground while measuring the center area of the panel

6.0 Block Diagram

6.1 TFT-LCD Module

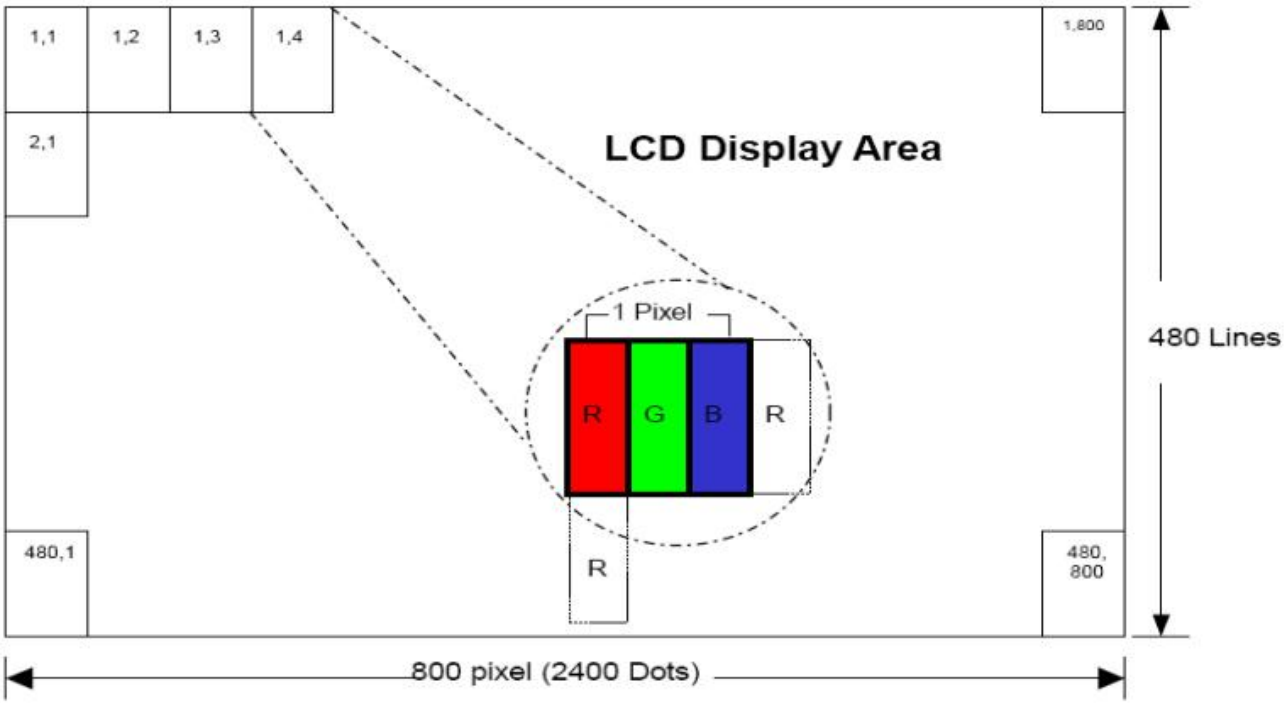

7. Electrical Characteristics

7.1 TFT LCD Module

Item	Symbol	Min.	Typ.	Max.	Unit	Note
Supply Voltage	V_{DD}	-	3.3	3.6	V	

7.2. Power On/Off Sequence

In order to prevent IC from power on reset fail, the rising time (T_{POR}) of the digital power supply VDD should be maintained within the given specifications. Refer to “AC Characteristics” for more detail on timing.

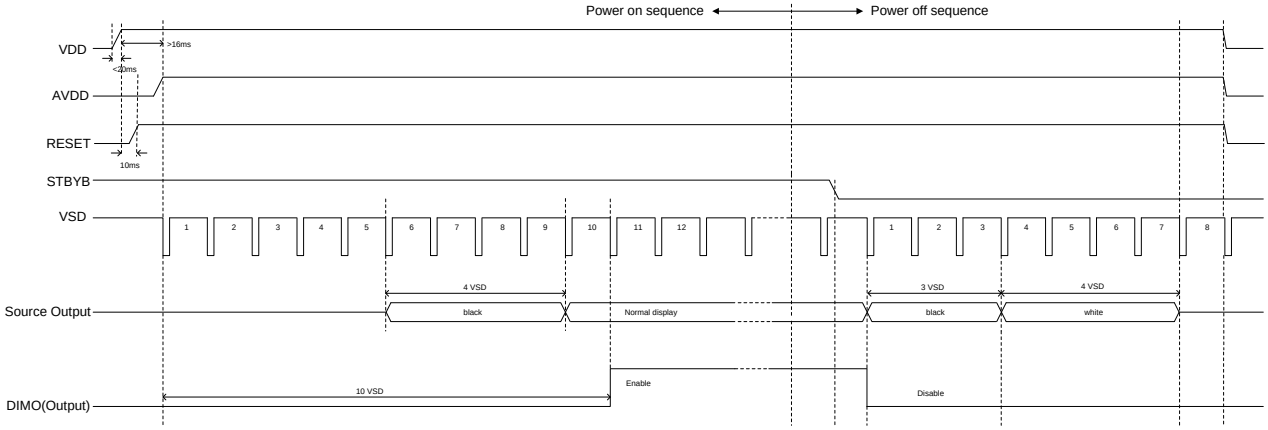

Figure 1. Power-On/Off Timing Sequence

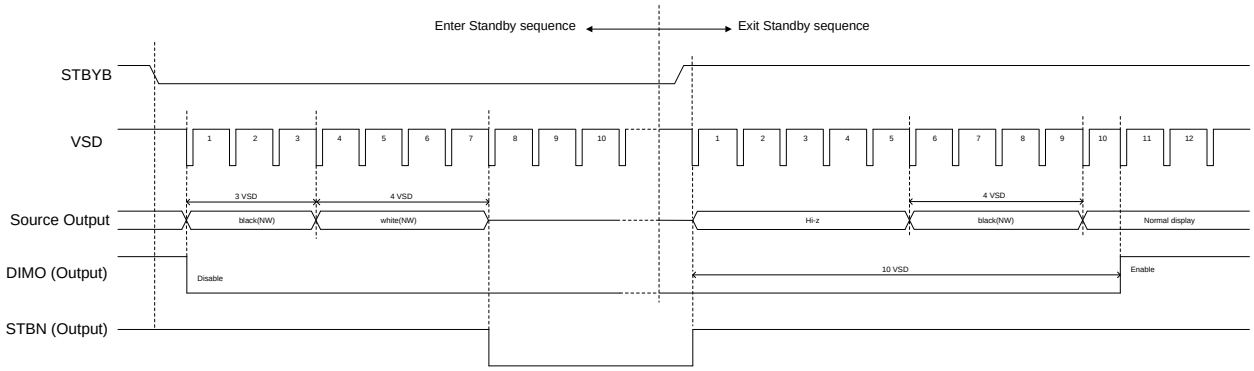

Figure 2. Enter and Exit Standby Mode Sequence

7.3.1 Data Input format

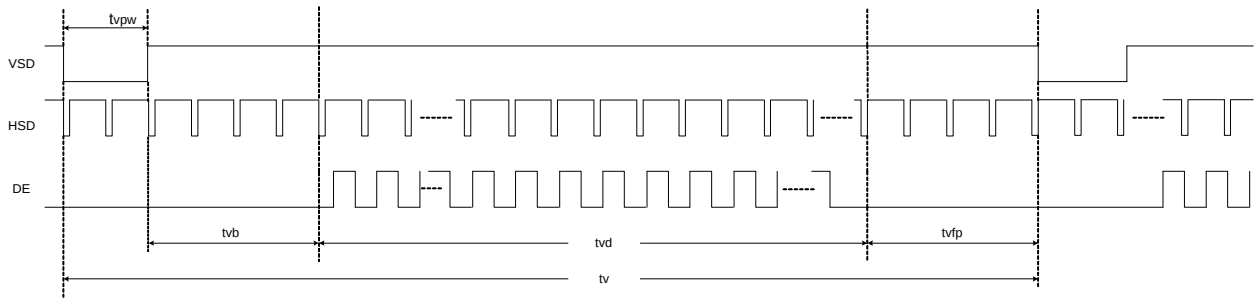

Figure 7. Vertical input timing

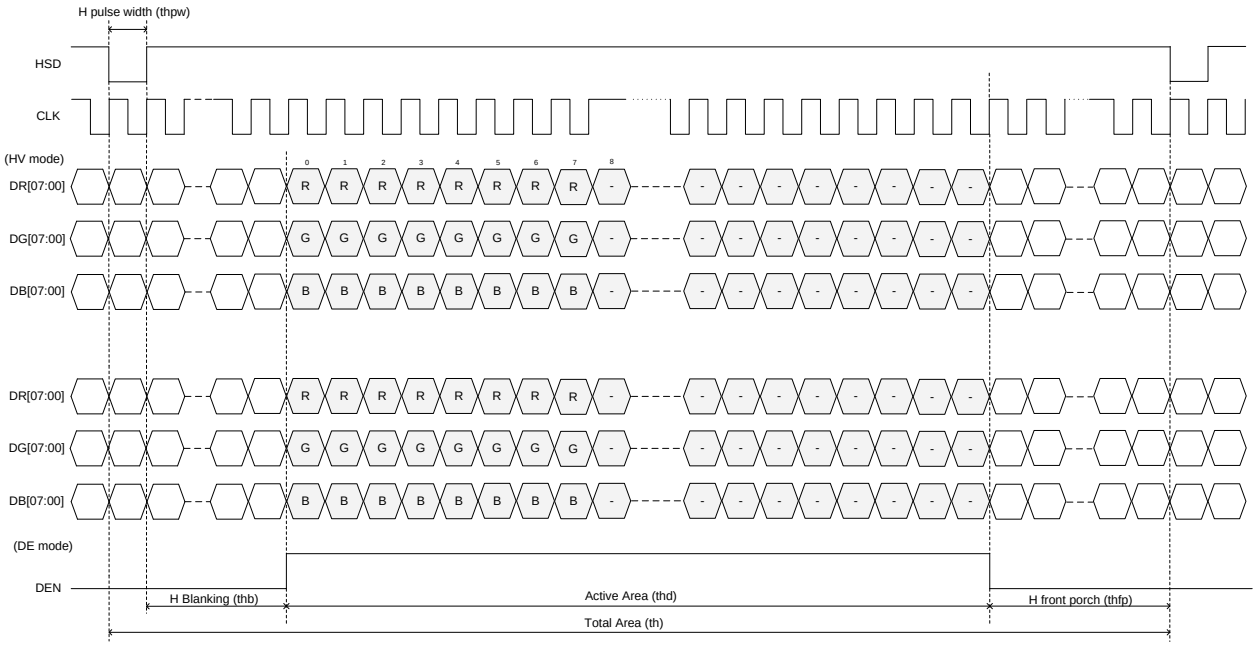

Figure 3. Horizontal input timing

7.3.2 Timing Characteristic . For 800 × 480 panel Table . Horizontal input timing

Parameter	Symbol	Value			Unit	Note
Horizontal display area	thd	800			DCLK	
DCLK frequency	fclk	Min.	Typ.	Max		
		20	33.3	50	MHz	
1 Horizontal Line	th	908	928	1088	DCLK	thb+thpw=88 DCLK is fixed.
HSD pulse width	thpw	1	48	87		
HSD Back Porch (Blanking)	thb	87	40	1		
HSD Front Porch	thfp	20	40	200		

Table 15. Vertical input timing

Parameter	Symbol	Min.	Typ.	Max.	Unit	Note
Vertical display area	tvd	480			H	
VSD period time	tv	517	525	712	H	tvpw+tvb=32H Is fixed
VSD pulse width	tvpw	1	1	3	H	
VSD Back Porch (Blanking)	tvb	31	31	29	H	
VSD Front Porch	tvfp	5	13	200	H	

8.0 Reliability test items

NO	Item	Conditions	Remark
1	High Temperature Storage	Ta=+80℃,48hrs	
2	Low Temperature Storage	Ta=-30℃,48hrs	
3	High Temperature Operation	Ta=+70℃,48hrs	
4	Low Temperature Operation	Ta=-20℃,48hrs	
5	High Temperature and High Humidity (operation)	Ta=+40℃,90%RH,48hrs	
6	Thermal Cycling Test (non operation)	-10℃(0.5hr)→+60℃(0.5hr),100cycles	

Note: All tests above are practiced at module type.
There is no display function NG issue occurred, All the cosmetic specification is judged before the reliability stress.

9.0 Packing form

9.1 Packing form 1

TBD

10.0 General Precaution

10.1 Use Restriction

This product is not authorized for use in life supporting systems, aircraft navigation control systems, military systems and any other application where performance failure could be life-threatening or otherwise catastrophic.

10.2 Asembly Precaytton

10.2.1 Please use the mounting hole on the module side in installing and do not bending or wrenching LCD in assembling. And please do not drop, bend or twist LCD module in handling.
10.2.2 Please design display housing in accordance with the following guide lines.
10.2.2.1 Housing case must be destined carefully so as not to put stresses on LCD all sides and not to wrench module. The stresses may cause non-uniformity even if there is no non-uniformity statically.
10.2.2.2 Keep sufficient clearance between LCD module back surface and housing when the LCD module is mounted. The clearance in the design is recommended taking into account the tolerance of LCD module thickness and mounting structure height on the housing.
10.2.3 Please do not push or scratch LCD panel surface with any-thing hard. And do not soil LCD panel surface by touching with bare hands. (Polarizer film, surface of LCD panel is easy to be flawed.)
10.2.4 Please do not press any parts on the rear side such as source IC, gate IC, and FPC during handling LCD module. If pressing rear part is unavoidable, handle the LCD module with care not to damage them.
10.2.5 Please wipe out LCD panel surface with absorbent cotton or soft cloth in case of it being soiled.
10.2.6 Please wipe out drops of adhesives like saliva and water on LCD panel surface immediately. They might damage to cause panel surface variation and color change.
10.2.7 Please do not take a LCD module to pieces and reconstruct it. Resolving and reconstructing modules may cause them not to work well.

10.3 Disassembling or Modification

Do not disassemble or modify the module. It may damage sensitive parts inside LCD module, and may cause scratches or dust on the display. HannStar does not warrant the module, if customers disassemble or modify the module.

10.4 Breakage of LCD Panel

10.4.1 If LCD panel is broken and liquid crystal spills out, do not ingest or inhale liquid crystal, and do not contact liquid crystal with skin.
10.4.2 If liquid crystal contacts mouth or eyes, rinse out with water immediately.
10.4.3 If liquid crystal contacts skin or cloths, wash it off immediately with alcohol and rinse thoroughly with water.
10.4.4 Handle carefully with chips of glass that may cause injury, when the glass is broken.

10.5 Absolute Maximum Ratings and Power Protection Circuit

10.5.1 Do not exceed the absolute maximum rating values, such as the supply voltage variation, input voltage variation, variation in parts' parameters, environmental temperature, etc., otherwise LCD module may be damaged.
10.5.2 Please do not leave LCD module in the environment of high humidity and high temperature for a long time.
10.5.3 It's recommended employing protection circuit for power supply.

10.6 Operation

10.6.1 Do not touch, push or rub the polarizer with anything harder than HB pencil lead.Use fingerstalls of soft gloves in order to keep clean display quality, when persons handle the LCD module for incoming inspection or assembly.
10.6.2 When the surface is dusty, please wipe gently with absorbent cotton or other soft material.
10.6.3 Wipe off saliva or water drops as soon as possible. If saliva or water drops contact with polarizer for a long time, they may causes deformation or color fading.
10.6.4 When cleaning the adhesives, please use absorbent cotton wetted with a little petroleum benzine or other adequate solvent.

10.7 Static Electricity

10.7.1 Protection film must remove very slowly from the surface of LCD module to prevent from electrostatic occurrence.
10.7.2 Because LCD module uses CMOS-IC on TFT-LCD panel, it is very weak to electrostatic discharge. Please be careful with electrostatic discharge.
10.7.3 Persons who handle the module should be grounded through adequate methods.

10.8 Disposal

When disposing LCD module, obey the local environmental regulations.

10.9 OTHERS

10.9.1 A strong incident light into LCD panel might cause display characteristics' changing inferior because of polarizer film, color filter, and other materials becoming inferior.
Please do not expose LCD module direct sunlight land strong UV rays.
10.9.2 Please pay attention to a panel side of LCD module not to contact with other materials in preserving it alone.
10.9.3 For the packaging box, please pay attention to the followings:
10.9.3.1 Packaging box and inner case for LCD are designed to protect the LCDs from the damage or scratching during transportation. Please do not open except picking LCDs up from the box.
10.9.3.2 Please do not pile them up more than 6 boxes. (They are not designed so.) And please do not turn over.
10.9.3.3 Please handle packaging box with care not to give them sudden shock and vibrations. And also please do not throw them up.
10.9.3.4 Packing box and inner case for LCDs are made of cardboard. So please pay attention not to get them wet. (Such like keeping them in high humidity or wet place can occur getting them wet.)

深圳市丽台电子有限公司

Quality inspection standards

品质允收标准

MODEL No. / 产品型号: Applies 0.95~5.0 TFT-LCD Panel
UPDATED DATE / 生效日期: 2022-05-20
VERSION / 版 本: A0
Customer Signature/客户签字: _____

RECORD OF REVISION/修订履历:

Version 版本	Revision Record 修订内容	Compile 修订者	Date of Revision 修订日期
V0	首发/Starting	Green	2022.05.20

1.Scope 1适用范围

This document shall be applied to 0.95~5.0 TFT-LCD Panel.

本文件适用于0.95~5.0 TFT-LCD Panel.

2.Inspection and Environment onditions/检查条件与环境

2. 1 Inspection Conditions 检查条件:

(1) Inspection Distance检测距离: 35 cm±5cm

(2) Each picture /每个画面：2~3 secs/秒，Cosmetic Inspection/外观10~12 secs/秒

(3) View Angle观看角度:

Light-on Inspection Angle点灯检验角度 ： ±45°

Cosmetic Inspection Angle外观检验角度 ： ±45°

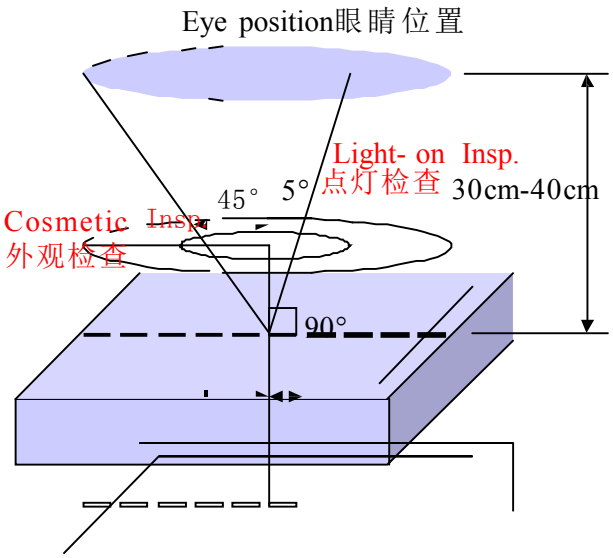

(Perpendicular to LCD panel surface垂直于液晶显示表面)

2.2 Environment Conditions环境条件:

Ambient Temperature 温度		25℃±5℃
Ambient Humidity 湿度		55±5%RH
Ambient Illumination 亮度	Cosmetic Inspection 外观检验	800-1000 Lux
	Functional Inspection 点灯检验	200~300Lux

2.3 Sampling Conditions 抽样条件:

(1) Lot Size：Quantity of shipment lot per model/.

批量：单次运送单一机型数量

(2) Sampling Method ：
抽样方法：

Sampling Plan 抽样计划		GB2828/2003
		Normal Inspection, Single Sampling 正常检验、单次抽样
		Geneal II Inspection 普通二级
AQL	Major Defect 主要缺点	0.25
	Minor Defect 次要缺点	0.65

(3) The classification of Major(MA) and Minor(MI) defects is shown as 3. Inspection Criteria.
主缺(MA)及次缺(MI)定义于”3.检查标准”

3.Terms and Definitions/术语和定义

3.1 Classification of defects缺陷的分类:

Major defects: A major defect is a defect that is likely to result in failure, or to reduce materially the usability of the product for its intended purpose.

主要缺陷：会导致产品功能失效或减少产品可用性的缺陷。

Minor defects: A minor defect either is a defect that is not likely to reduce materially the usability of the product for its intended purpose, or is a departure from an established having little bearing on the effective use or operation of the product.

次要缺陷：不会导致产品功能失效，不会减少产品的有效使用和操作。

3.2 Extraneous substances that can be wiped out ,like Finger point,Particles are not cnsidered as a defect . 可以被擦拭干净的表面物质不视为缺陷 (如手指印，尘粒) 。

3.3 Defects on the Black Matraix(outside ofActive Area) are not considered as a defect . BM 区域 (AA 区以外) 的缺陷不视为缺陷。

3.4 Size of circular defect,is defined by diameter”D” 。The defect average diameter D=1/2(W+L) 圆形缺陷的大小是由直径 D 定义的。缺陷的平均直径 D=1/2(W+L)

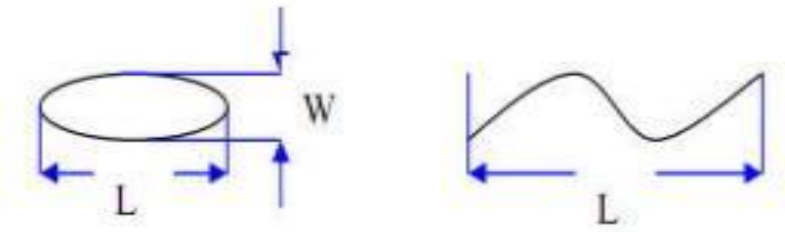

3.5 When defect size L≥2W,the defect count as liner type defect.Size of linear defect is defined by length(L) and the maximum width(W).

当缺陷尺寸 L≥2W 时，被视为线状缺陷。线状缺陷是由长度 (L) 和最大宽度 (W) 定义的。 3.6 3.6 Mura criteria :judged by ND filter6%,and can't be seen under at ND filter 6% .

3.6 MURA 判断标准：使用 ND6%判定，且透过 ND6%，遮住不可见.

3.7 Dot defect is defind as the defective area of the dot is larger than 50% of the dot area and is visible through 6% ND filter

DOT 定义为点缺陷面积大于 50% DOT 面积, 且透过 ND6%遮住是可见的.

The drawing of 1/2 area sub-pixel definition: The 1/2 area sub-pixel can be defined as below one or more of specific shapes

1/2 面积的子像素定义绘图：1 / 2 面积的子像素可以定义为如下一个或多个特定形状图：

3.8 A dot defect that is smaller than the defined dot defect will be treated as small bright dot. 细碎亮点：小于"DOT 定义"的点缺陷视为细碎亮点。

I 区与 O 区比例：1：2：1

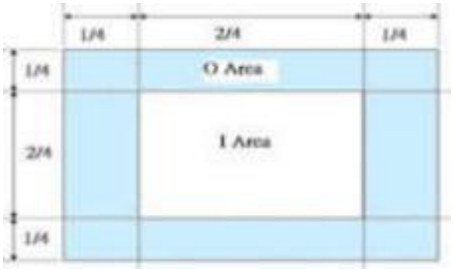

3.9 Inspection method of ND Filter - holding ND filter in front of the panel around 5cm and examine the panel from 35±5 cm in the front view for 2~3 second.

ND 卡的检查方法：在面板上方大约 5CM 处握住 ND 卡，眼睛距离面板 30-40CM，通过 2~3 秒观察。

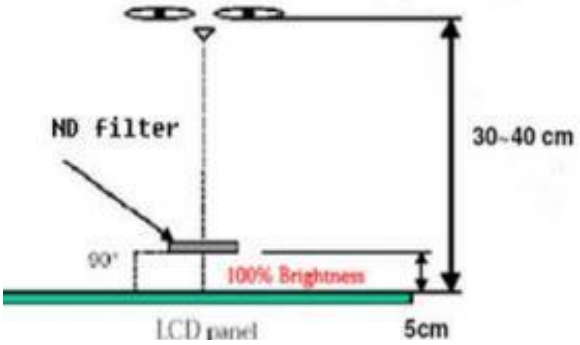

4. Inspection Criteria 检验标准

4.1 Appearance Inspection specification 外观检查规格:

Judge area 区域	Judge item 项目	Specification inspection 检查规格	Judge criterion	
			Major	Minor
Silicone 硅胶	Silicone spread 硅胶涂布	The height can't over C/F， color filter， or gomu 高度不能过超 C/F		MI
	Silicone residue 硅胶残余	Can't cover polarizer，FPC …etc. 不能覆盖 POL，FPC 等		MI
LCD 玻璃	Wire(on Array) 线路	No damage 不能损伤	MA	
	Edge 边缘	No extended crack 不可有延伸性裂纹	MA	
PCBA Connector FPC/FFC	Appearance 外观	Scratch or damage result in copper expose is not allowed 划伤或损伤不允许导致出现露铜		MI
	Component 零件	No damage 不能损伤	MA	
	Connection status 连接状况	Need correct connection 需要正确连接	MA	
	Broken 破裂	Not allowable 不允许	MA	
	Folding sign 对位记号折叠	Not allowable 不允许	MA	
POL 偏光片	Scract on the polarizer 偏光片划伤	1.W≤0.05mm；L≤5mm，Ignore（忽略）		MI
		2.0.05mm<W≦0.10mm ; L≤5mm ; N≤3 ; DS≥10mm		
		3.0. 10mm＜W；5mm＜ L， Not allowable不允许		

Judge area 区域	Judge item 项目	Specification inspection 检查规格	Judge criterion	
			Major	Minor
POL 偏光片	Dent on the polarizer 偏光片凹痕	1.D＜0. 15mm，Ignore（忽略）		MI
		2.0.15mm＜D≤0.30mm；N≤3；DS≥10mm		
		3.0.30mm＜D，Not allowable不允许		
	POL Linear bubble 线状气泡	1.W≤0.05mm；L≤5mm，Ignore（忽略）		MI
		2.0.05mm<W≦0.10mm ; L≤5mm ; N≤3 ; DS≥10mm		
		3.0. 10mm＜W；5mm＜ L ，Not allowable不允许		
	POL dot bubble 点状气泡	1.D＜0. 15mm，Ignore（忽略）		MI
		2.0.15mm＜D≤0.30mm；N≤3；DS≥10mm		
		3.0.30mm＜D，Not allowable不允许		
	POL edge bubble 片边缘气泡	1. The display area is 1/2BM outside，Not allowable 显示区往外 1/2BM 区域内，不允许 2. The display area is outside the outer 1/2BM area，Not allowable 显示区往外1/2BM区域以外，不管控		MI

Judge area 区域	Judge item 项目	Specification inspection 检查规格	Judge criterion	
			Major	Minor
TP&CG	Foreign Material in spot shape 点状异物	1.D≤0.15mm；Ignored（忽略） 2.0.15mm＜D≤0.30mm；N≤3；DS≥10mm 3.D＞0.30mm；Not allowable不允许		MI
	Fisheye/bubbles 鱼眼/气泡	1.D≤0.15mm；Ignored（忽略） 2.0.15mm＜D≤0.30mm；N≤3；DS≥10mm 3.D＞0.30mm；Not allowable不允许		MI
	Scratches on the surface 表面划伤	1.W≤0.05mm；Ignored（忽略） 2.0.05mm<W≤0.10mm，L≤5mm；N≤3；DS≥10mm 3.W＞0.10mm，L＞5mm；Not allowable不允许		MI
	Collapse corner、Crash edge 崩角、崩边	Product front:/产品正面： collapse corners, collapsed edges are not allowed 崩角、崩边不允许； Product back/产品背面： X≤ 0.5 , Y≤0.5，Z≤1/2T；N≤2；DS≥10mm	MA	
	Printed fonts/LOGO 丝印/LOGO	Printed fonts/LOGO clarity、complete、content right 字体/LOGO丝印清晰、完整、内容正确		MI
	Broken 破损	Not allowable不允许	MA	
	Dirty surfaces 表面脏污	Dirt cannot be wiped， Not allowable 不可擦拭的脏污，不允许		MI
	IR hole IR孔	Black spots/黑点： W ≤0.15mm，N≤2，Not visible against a black background/黑色背景下不可见		MI
		IR hole Scratches： 1.W＜0.03mm，Ignored（忽略） （Dense points Not allowable 不允许密集）； 2.0.03mm＜W≤0.08mm；L≤2mm；N≤2； 3.W＞0.08mm，L＞2mm，Not allowable 不允许		MI

4.2 Electrical Inspection specification电性检查规格:

Item 项目	Judgment Criteria 判定标准	Judge criterion	
		Major	Minor
LCD Bright /Dark dot 玻璃亮点/暗点	1.D≦0. 15mm， Ignored（忽略），Not dense（不可密集） 2.0.15mm<D≦0.30mm ； N≦3 ； DS≥10mm 3.D＞0.30mm ，Not allowed/不允许		MI
Mura	Invisible through 6% ND filter，200~300Lux 透过ND6% 遮住 ， 目测不可见即为OK， 200~300Lux		MI
Small bright dot 细碎亮点	Not allowed if it can be observed through ND Filter6% 透过ND6%目测看得见，不允许		MI
ZBD Rate 玻璃亮点比率	90:10		MI
Light Leakage 漏光	Invisible through 6% ND filter，OK 透过ND6%遮住目测不可见即为OK If necessary,set up set up Limit Sample. 如果有必要，可制订限度样品		MI
Bubble in Cell (LC Bubble/Actice Area) CELL气泡 (AA区LCD气泡)	Eyes should not find it . 目视观察不可见，视为 OK	MA	

Item 项目	Judgment Criteria 判定标准	Judge criterion	
		Major	Minor
Foreign Material in spot shape 点状异物	1.D≦0.15mm， Ignored（忽略） 2.0.15mm<D≦0.30mm ； N≦3； DS≥10mm 3.D＞0.30mm ， Not allowable/不允许		MI
Foreign Material in line or spiral shape 线状异物	1.W≦0.05mm ， Ignored（忽略） 2. L≤5mm ； 0.05mm<W≦0.10mm ； N≦3 3.W＞0.10mm ； L＞5mm ， Not allowable/不允许		MI
White dot in back-light 白点	1.D≦0. 15mm，Ignored（忽略） 2.0.15mm<D≦0.30mm ； N≦3 ； DS≥10mm 3.D＞0.30mm ， Not allowed/不允许		MI
TP no touch 无触摸	Not allowable 不允许	MA	
Abnormal Disply 显示异常	Not Allowed 不允许	MA	
NO display 无显示	Not Allowed 不允许	MA	
Line Defect 缺线	Not Allowed 不允许	MA	
Angle of view error 视角错误	Not Allowed 不允许	MA	
Tect crostalk 不消失的残影	Not Allowed 不允许	MA	