Request information

PRODUCT SPECIFICATION

TFT-LCD MODULE

Module No: 100300-01

☑ Preliminary Specification

☐ Approval Specification

Designed by	Checked by	Approved by

Final Approval by Customer

Approved by	Comment

For more information, contact us:

WWW.DCLTEK.COM | 1-800-407-8917 | SALES@DCLTEK.COM

※The specification of “TBD” should refer to the measured value of sample . If there is difference between the design specification and measured value, we naturally shall negotiate and agree to solution with customer.

This document contains confidential and proprietary information of DCL Technologies, Inc. It is provided solely for the recipient's evaluation and may not be reproduced, disclosed, or distributed, in whole or in part, without the prior written consent of DCL Technologies, Inc.

1.Document Revision History

Version	Contents	Date	Note
V0	Initial version	2024.07.16	

2.General Specifications

NO	Item	Specification	Unit	Remark
1	LCD Size	TFT"4.0	inch	-
2	Panel Type	IPS	-	-
3	Display Resolution	720 x RGB x 720	pixel	-
4	Display Mode	Normally Black	-	-
5	Number of Colors	16.7M	-	-
6	Viewing Direction	ALL	-	-
7	LCM Module Size	105.60(H) ×109.87(V)×2.20(T)	mm	TYP
8	Active Area	101.52 (H) × 101.52(V)	mm	Note
9	Pixel Pitch	0.141(H) ×RGB×0.141(V)	mm	Nete
10	Weight	TBD	g	-
11	Driver IC	NV3051F	-	-
12	Light Source	White LED	-	-
13	Interface	4 lane-MIPI	-	-

Note : Please refer to the mechanical drawing

3. Mechanical Drawing

Front View

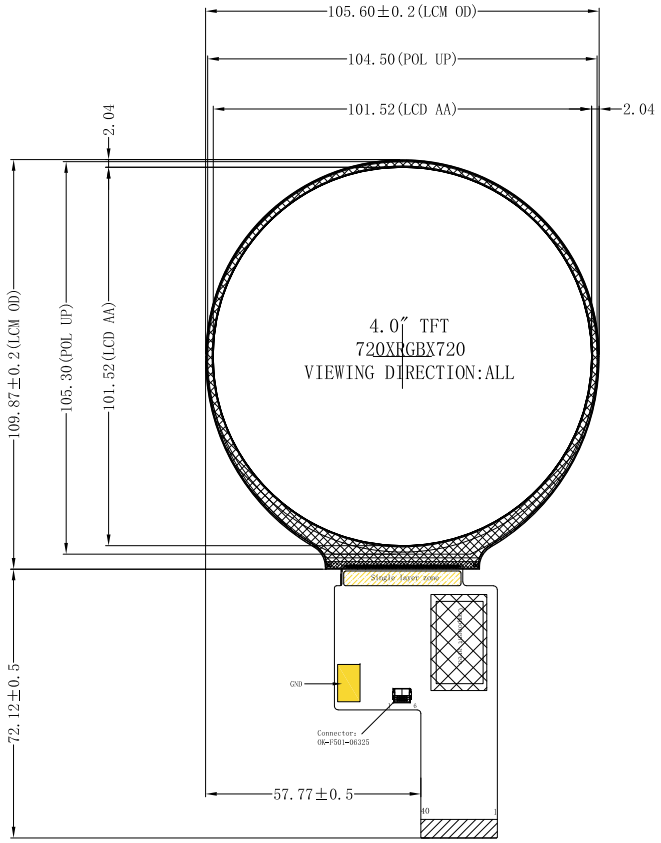

Side View

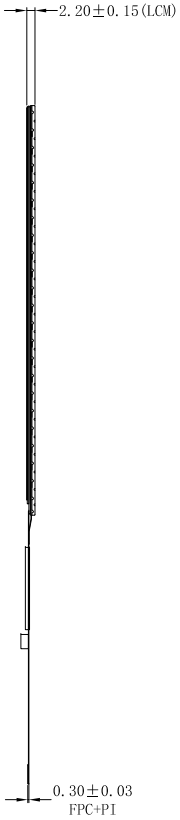

Back View

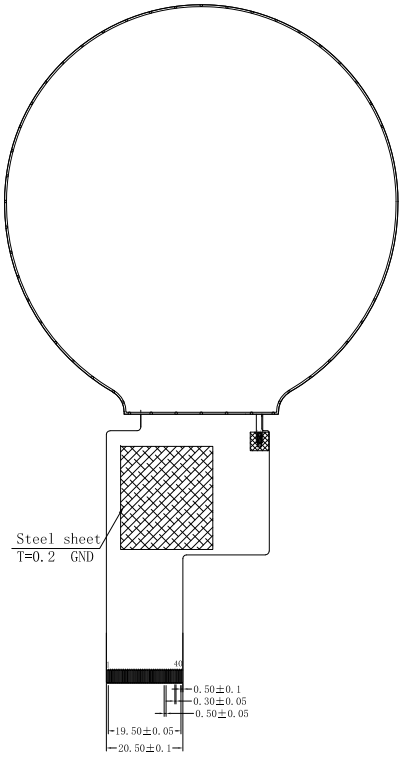

PIN	DESCRIPIION
1	GND
2	D0P
3	D0N
4	GND
5	D1P
6	D1N
7	GND
8	CLKP
9	CLKN
10	GND
11	D2P
12	D2N
13	GND
14	D3P
15	D3N
16	GND
17	GND
18	VCC-1.8V
19	VCC-1.8V
20	CTP-VDD-3.3V
21	CTP-SDA-1.8V
22	CTP-SCL-1.8V
23	CTP-GND
24	RSTB
25	STBYB(GND)
26	CTP-INT
27	GND
28	K
29	K
30	GND
31	NC
32	GND
33	GND
34	NC
35	A
36	A
37	GND
38	VDD-3.3V
39	VDD-3.3V
40	CTP-RESET

PIN	DEFINE
1	GND
2	TP-INT
3	TP-SDA
4	TP-SCL
5	TP-RESET
6	TP-VCI

Notes:
1. Display : 4.0″, TFT
2. Resolution: 720xRGBx720
3. LCD Viewing Direction: ALL,
4. Drive IC:NV3051F
5. Display Mode: Normally Black
6. LCM Bringhtness: 470cd/m²(TYP),uniformity≥80%
7. unmark Tolerance:±0.2
8. OPERATING TEMP: -20° C~ +70° C
9. STORAGE TEMP: -30° C~ +80° C
10. Requirements on Environmental Protection: ROHS

LED CIRCUIT DIAGRAM:

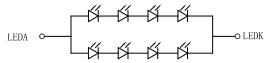

If= 40 mA

Vf= 24.0 V(typ)

REV	DESCRIPTION	DATE	NAME
3			
2			
1			
0	NEW	2024.07.11	KEVIN

LEADTEK DISPLAY

LEADTEK COMPANY LIMITED

SCALE:1/1	UNIT:mm	PAGE:1/1		Approve	Check	Drawn
Part No:	LTK040MNBLM18		VER:V0	IAN	JONA	KEVIN
Customer No:						

4.0 Interface Pin Connection

(Input signal): FPC Down Connector, (40S-0.5SH (HIROSE), 40pin, pitch = 0.5mm)

N0	Symbol	Function
1	GND	Power ground.
2	MIPI_D0P	MIPI_DP0+ are differential data signal line
3	MIPI_D0N	MIPI_DP0- are differential data signal line
4	GND	Power ground.
5	MIPI_D1P	MIPI_DP1+ are differential data signal line
6	MIPI_D1N	MIPI_DP1- are differential data signal line
7	GND	Power ground.
8	MIPI_CLKP	CLOCK Lane positive-end input pin
9	MIPI_CLKN	CLOCK Lane engative-end input pin
10	GND	Power ground.
11	MIPI_D2P	MIPI_DP2+ are differential data signal line
12	MIPI_D2N	MIPI_DP2- are differential data signal line
13	GND	Power ground.
14	MIPI_D3P	MIPI_DP3+ are differential data signal line
15	MIPI_D3N	MIPI_DP3- are differential data signal line
16	GND	Power ground.
17	GND	Power ground.
18	IOVCC(1.8V)	A supply voltage to the digital circuit. (1.8V)
19	IOVCC(1.8V)	A supply voltage to the digital circuit. (1.8V)
20	TP-VDD	Power supply for CTP.
21	TP-SDA	SDA pin for CTP
22	TP-SCL	SCL pin for CTP
23	TP-GND	GND pin for CTP
24	RESET	Reset signal（Low: Active).
25	NC	Not connect
26	TP-INT	INT pin for CTP
27	GND	Power ground.
28	LED-	LED cathode.

29	LED-	LED cathode.
30	GND	Power ground.
31	NC	Not connect
32	GND	Power ground.
33	GND	Power ground.
34	NC	Not connect
35	LED+	LED anode.
36	LED+	LED anode.
37	GND	Power ground.
38	VCC(3.3V)	A supply voltage to the digital circuit. (3.3V)
39	VCC(3.3V)	A supply voltage to the digital circuit. (3.3V)
40	TP-RESET	RESET pin for CTP

5.0 Absolute Maximum Ratings

5.1 Electrical Absolute Rating

Item	Symbol	Min.	Typ.	Max.	Unit	Note
Power Voltage	IOVCC	2.5	3.3	3.6	V	
Power Voltage	V_{DD}	1.65	1.8	3.6	V	

5.2 Environment Absolute Rating

Item	Symbol	Min.	Max.	Unit	Note
Operating Temperature	Topa	-20	70	℃	
Storage Temperature	Tstg	-30	80	℃	

5.3 Back-light Unit:

PARAMETER	Sym.	Min.	Typ.	Max.	Unit	Test Condition	Note
LED Current	IF	–	40	–	mA	–	–
LED Voltage	VF	–	24	–	V	I=40mA	–
Life Time	–	–	50000	–	Hr.	I≦40mA	–
LCM Brightness	Luminance	–	470	--	cd/m2	I=40mA	
Color	White						

Note (1) Permanent damage may occur to the LCD module if beyond this specification. Functional operation should be restricted to the conditions described under normal operating conditions.

(2)Ta=25±2℃

(3)Test condition: LED Current 40mA

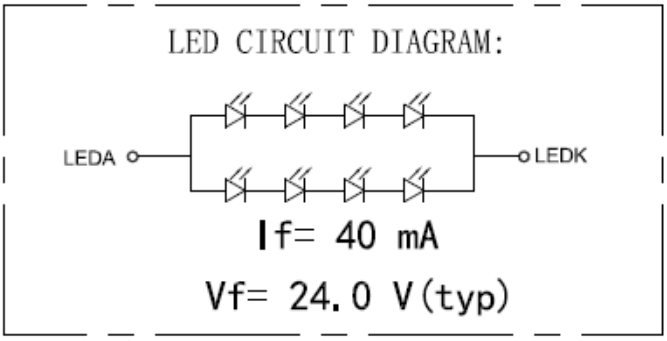

6.0、DSI Power On/Off Timing

6.1Power On Timing of External Power IC

Case 1 – RESX line is held high or unstable by host at power on

If RESX line is held High or unstable by the host during Power On, then a Hardware Reset must be applied after both VCI and IOVCC have been applied – otherwise correct functionality is not guaranteed. There is no timing restriction upon this hardware reset.

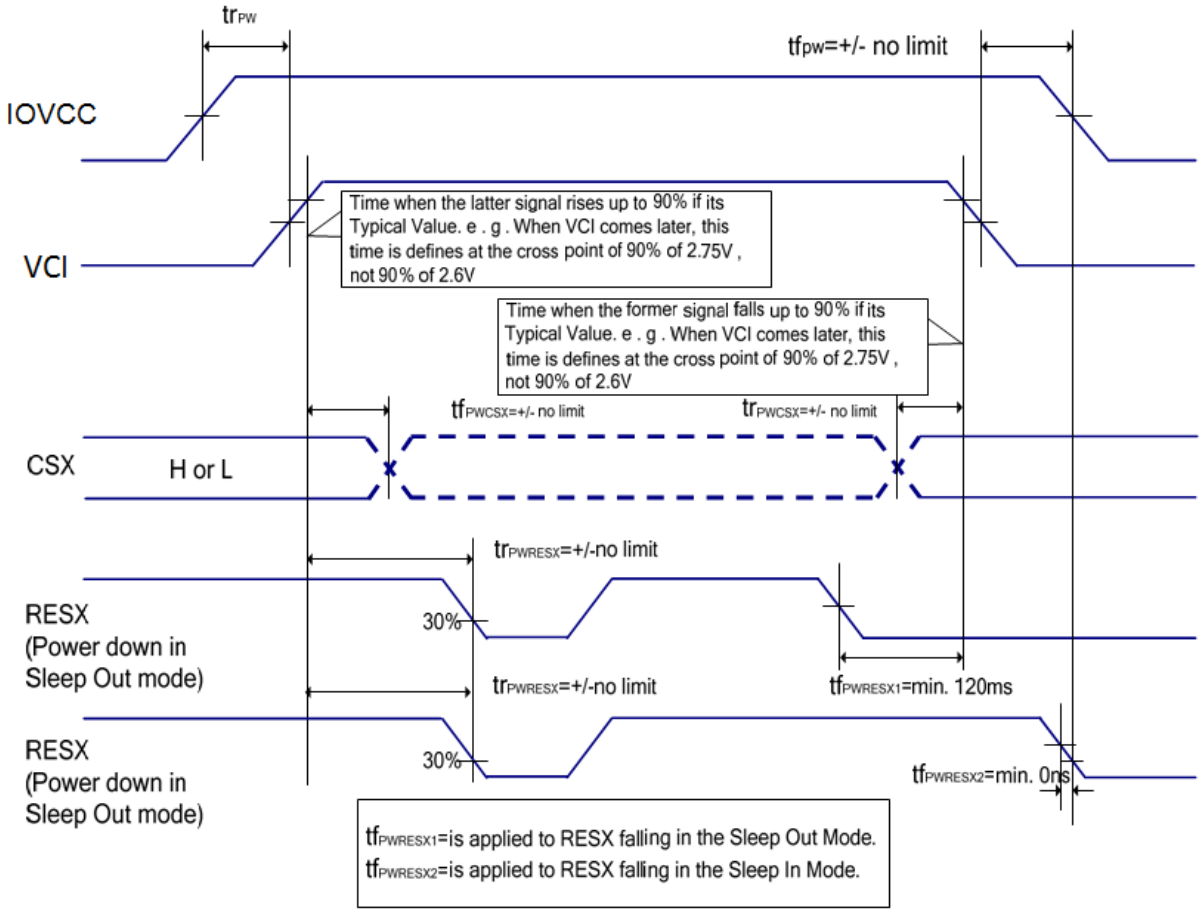

6.2Power Off Timing of External Power IC

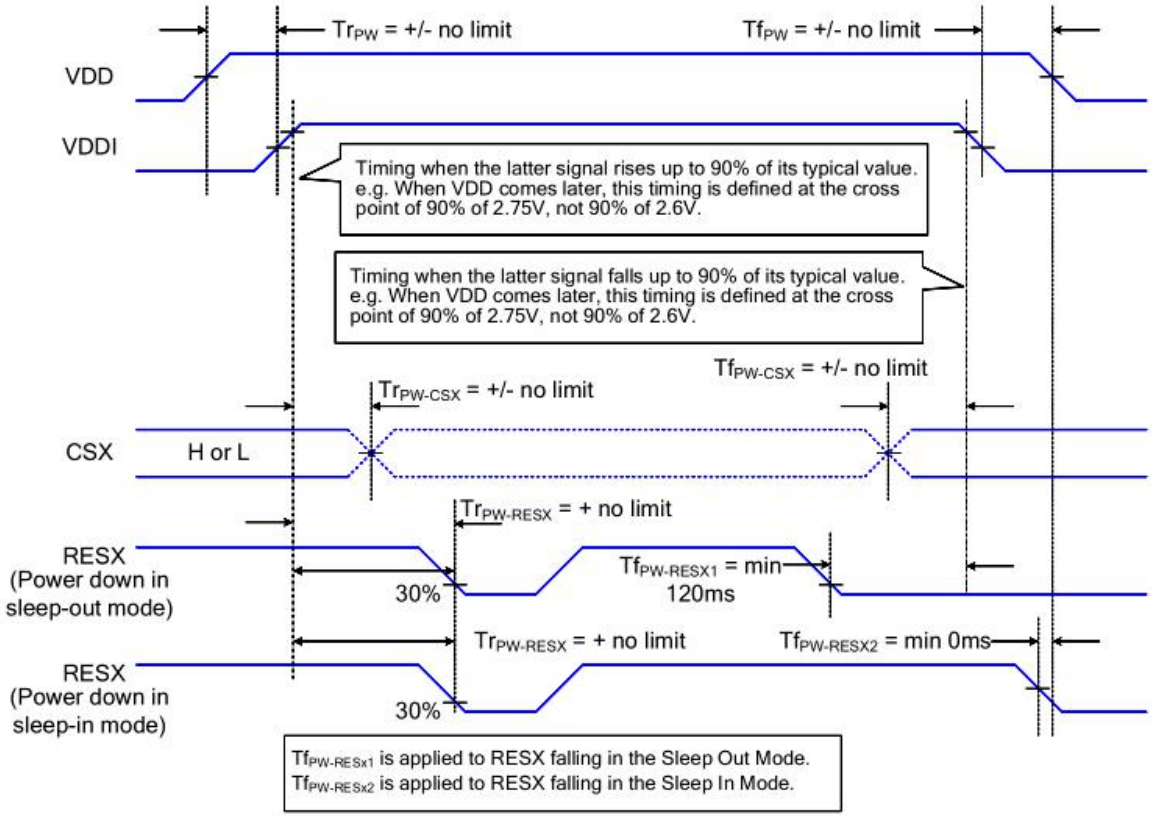

6.3 Below Table provide the timing parameter by external Vertical-cycle and Horizontal cycle and PCLK Frequency (Resolution for 720 horizontal x 720vertical display with Frame-Rate of 60Hz)

Parameters	Symbols	Min.	Typ	Max.	Unit
MIPI Vedio data-rate (4 lane)	-	-	500	-	Mbps
PCLK Frequency	FPCLK	TBD	63.92	-	MHz
Horizontal Synchronization	Hsync	TBD	2	-	PCLK
Horizontal Back Porch	HBP	TBD	44	-	PCLK
Horizontal Front Porch	HFP	TBD	46	-	PCLK
Hsync+ HBP+ HFP	-	TBD	90	-	PCLK
Horizontal Address (Display area)	Hadr	-	720	-	PCLK
Horizontal cycle	-	TBD	812	-	PCLK
Vertical Synchronization	Vsync	TBD	2	-	Line
Vertical Back Porch	VBP	TBD	14	-	Line
Vertical Front Porch	VFP	TBD	16	-	Line
Vsync+ VBP+ VFP	-	TBD	32	-	Line
Vertical Address (Display area)	Vadr	-	720	-	Line
Vertical cycle	-	-	812	-	Line
Frame-Rate			60		Hz

7. ELECTRO-OPTICAL CHARACTERISTICS

The backlight should be operating for 30 minutes prior to measurement.

<Table 1. Optical Specifications >

Parameter		Symbol	Condition	Min.	Typ.	Max.	Unit	Remark
Viewing Angle range	Horizontal	Θ_3	CR > 10	80	85	-	Deg.	Note 1
		Θ_9		80	85	-	Deg.	
	Vertical	Θ_{12}		80	85	-	Deg.	
		Θ_6		80	85	-	Deg.	
Luminance Contrast ratio		CR	Θ = 0° (Center) Normal Viewing Angle	1000	1200	-		Note 2
Transmittance (pol)		T(%)		4.55	5.35	-	%	@Silicate BLU POL:HC+ Clear Note 3
White luminance uniformity		ΔY					%	
White Chromaticity		x_w		0.262	0.292	0.322		CF @C Light Note 4
		y_w		0.307	0.337	0.367		
Reproduction of color	Red	x_R		0.620	0.650	0.680		
		y_R		0.292	0.322	0.352		
	Green	x_G		0.250	0.280	0.310		
		y_G		0.533	0.563	0.593		
	Blue	x_B		0.105	0.135	0.165		
		y_B		0.111	0.141	0.171		
Response Time (Rising + Falling)		T_{RT}	Ta= 25° C Θ = 0°	-	30	35	ms	Note 5

Note 1.Ambient condition：25℃±2℃，60±10%RH，under 10 Lunx in the darkroom。

Note 2.Measure device：BM-7A (TOPCON)，viewing cone=2°

Lv = Average Surface Luminance with all white pixels (P1,P2,P3,P4,P5)

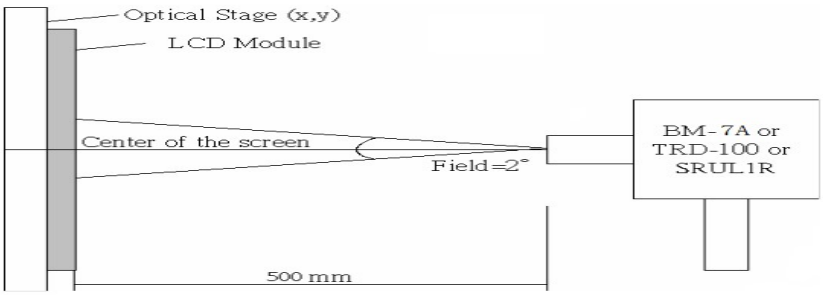

Note 3. Definition of Contrast Ratio：

$$CR = \frac{\text{Average Surface Luminance with all black pixels (P1,P2,P3,P4,P5)}}{}$$

Average Surface Luminance with all white pixels (P1,P2,P3,P4,P5)

Note 4. Definition of Response Time (Ton, Toff), The response time is defined as the time interval between the 10% and 90% amplitudes.

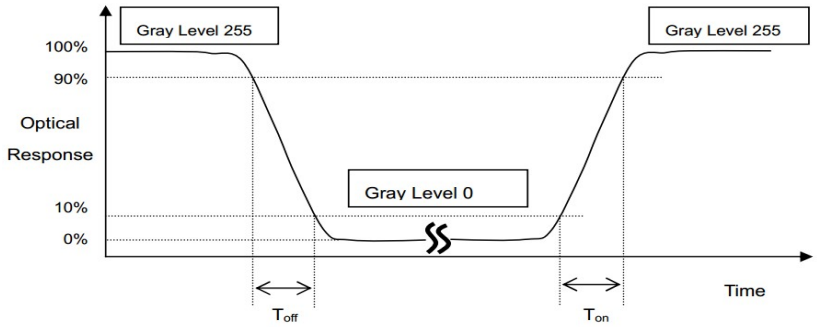

Note 5. Definition of view angle(θ，ψ)：

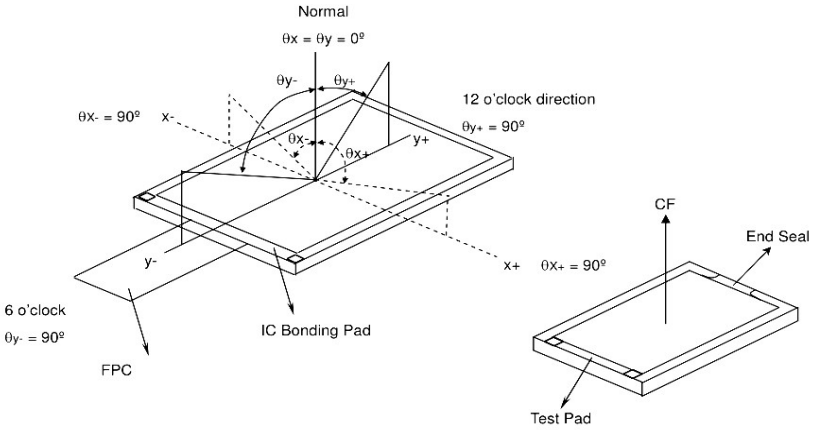

Note 6. The LCD module should be stabilized at a given temperature for 20 minutes to avoid abrupt temperature change during measuring. In order to stabilize the luminance, the measurement should be executed after lighting Backlight for 20 minutes in a windless room. Measouring method for Contrast ratio, surface luminance, Luminance uniformity,CIE(x,y) chromaticity.

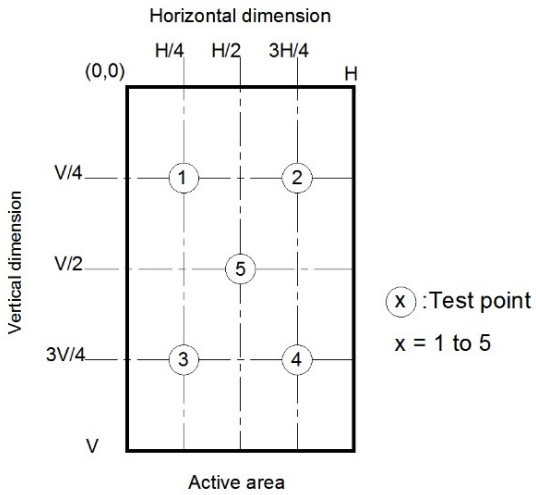

Light spot size ∅=7mm, 500mm distance from the LCD surface to detector lens measurement instrument is TOPCON's luminance meter BM-7

8. Reliability test items

No.	Test Item	Test Condition	Notes
1	High Temp. Storage	+80°C / 48H	1. Functional test isOK. Missing Segment,short, unclear segment non-display,display abnormally and liquid crystal leakare un-allowed. 2. No low temperature bubbles,end seal loose andfall, frame rainbow.
2	Low Temp. Storage	-30°C / 48H	
3	High Tempe. Operating	+70°C / 48H	
4	Low Tempe. Operating	-20°C / 48H	
5	High Temperature /Humidity storage	50°C x 90%RH /48H	
6	Thermal and cold shock	Static state， -20℃（30min） ~60℃（30min），50 cycles	
7	ESD test	± 2KV,Human Body Mode, 150pF/330Ω; ±4KV, Air Mode, 150pF/330Ω;	

Note: All tests above are practiced at module type.

There is no display function NG issue occurred, All the cosmetic specification is judged before the reliability stress.

9.0 General Precaution

9.1 Use Restriction

This product is not authorized for use in life supporting systems, aircraft navigation control systems, military systems and any other application where performance failure could be life-threatening or otherwise catastrophic.

9.2 Asembly Precaytton

1、Please use the mounting hole on the module side in installing and do not bending or wrenching LCD in assembling. And please do not drop, bend or twist LCD module in handling.

2、Please design display housing in accordance with the following guide lines.

3、Housing case must be destined carefully so as not to put stresses on LCD all sides and not to wrench module. The stresses may cause non-uniformity even if there is no non-uniformity statically.

4、Keep sufficient clearance between LCD module back surface and housing when the LCD module is mounted. The clearance in the design is recommended taking into account the tolerance of LCD module thickness and mounting structure height on the housing.

5、 Please do not push or scratch LCD panel surface with any-thing hard. And do not soil LCD panel surface by touching with bare hands. (Polarizer film, surface of LCD panel is easy to be flawed.)

6、Please do not press any parts on the rear side such as source IC, gate IC, and FPC during handling LCD module. If pressing rear part is unavoidable, handle the LCD module with care not to damage them.

7、Please wipe out LCD panel surface with absorbent cotton or soft cloth in case of it being soiled.

8、 Please wipe out drops of adhesives like saliva and water on LCD panel surface immediately. They might damage to cause panel surface variation and color change. 11.2.7 Please do not take a LCD module to pieces and reconstruct it. Resolving and reconstructing modules may cause them not to work well.

9.3 Disassembling or Modification

Do not disassemble or modify the module. It may damage sensitive parts inside LCD module, and may cause scratches or dust on the display. does not warrant the module, if customers disassemble or modify the module.

9.4 Breakage of LCD Panel

1 、If LCD panel is broken and liquid crystal spills out, do not ingest or inhale liquid crystal, and do not contact liquid crystal with skin.

2、 If liquid crystal contacts mouth or eyes, rinse out with water immediately.

3、 If liquid crystal contacts skin or cloths, wash it off immediately with alcohol and rinse thoroughly with water.

4、 Handle carefully with chips of glass that may cause injury, when the glass is broken.

9.5 Absolute Maximum Ratings and Power Protection Circuit

1、Do not exceed the absolute maximum rating values, such as the supply voltage variation, input voltage variation, variation in parts' parameters, environmental temperature, etc., otherwise LCD module may be damaged.

2、 Please do not leave LCD module in the environment of high humidity and high temperature for a long time.

3、 It's recommended employing protection circuit for power supply.

11.6 Operation

1 、Do not touch, push or rub the polarizer with anything harder than HB pencil lead.Use fingerstalls of soft gloves in order to keep clean display quality, when persons handle the LCD module for incoming inspection or assembly.

2、 When the surface is dusty, please wipe gently with absorbent cotton or other soft material.

3 、Wipe off saliva or water drops as soon as possible. If saliva or water drops contact with polarizer for a long time, they may causes deformation or color fading.

4 、When cleaning the adhesives, please use absorbent cotton wetted with a little petroleum benzine or other adequate solvent.

9.6 Static Electricity

1 、Protection film must remove very slowly from the surface of LCD module to prevent from electrostatic occurrence.

2、 Because LCD module uses CMOS-IC on TFT-LCD panel, it is very weak to electrostatic discharge. Please be careful with electrostatic discharge.

3 、Persons who handle the module should be grounded through adequate methods.

9.7 Disposal

When disposing LCD module, obey the local environmental regulations.

9.8 OTHERS

1 、A strong incident light into LCD panel might cause display characteristics' changing inferior because of polarizer film, color filter, and other materials becoming inferior. Please do not expose LCD module direct sunlight land strong UV rays.

2、 Please pay attention to a panel side of LCD module not to contact with other materials in preserving it alone.

3、 For the packaging box, please pay attention to the followings:

4、Packaging box and inner case for LCD are designed to protect the LCDs from the damage or scratching during transportation. Please do not open except picking LCDs up from the box.

5、 Please do not pile them up more than 6 boxes. (They are not designed so.) And please do not turn over.

6、 Please handle packaging box with care not to give them sudden shock and vibrations. And also please do not throw them up.

7、Packing box and inner case for LCDs are made of cardboard. So please pay attention not to get them wet. (Such like keeping them in high humidity or wet place can occur getting them wet.)

10.0 Packing form-TBD

DCLTEK

深圳市丽台电子有限公司

Incoming Inspection Standards

来料检验标准

Model No. / 产品型号: **Applies 0.95~5.0 Inch Touch Display Screen**
Updated Date /生效日期: **2022-05-20**
Version / 版 本: **A0**
Customer confirmation : _____

Record of Revision /修订履历

Version /版本	Revision Record /修订内容	Reviser /修订人	Revision Date /修订日期
V0	首发 / Starting		2022.05.20

1.Scope of application /适用范围.

This document shall be applied to 0.95~5.0 inch touch display screen.

本文件适用于0.95~5.0 寸触摸显示屏.

2.Inspection conditions and environment /检验条件与环境.

2. 1 Inspection Conditions /检验条件:

(1) Inspection Distance /检测距离: 35cm ±5cm.

(2) Check time /检验时间：

Displays performance test /功能测试：2~3S /Image，Cosmetic Inspection /外观检验:10~12S.

(3) Check the viewing angle /检验视角:

Light-on Inspection Angle /点灯检验角度： ±45°.

Cosmetic Inspection Angle /外观检验角度：±45°.

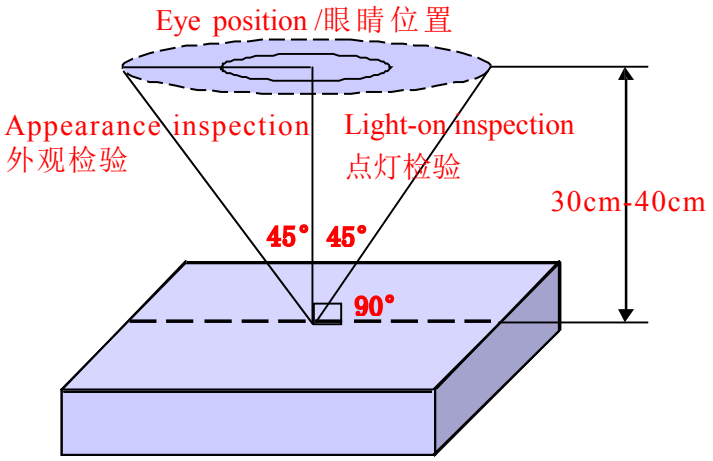

(Perpendicular to LCD panel surface /垂直于LCD表面)

2.2 Inspection environment /检验环境:

Ambient Temperature 温度		25℃±5℃
Ambient Humidity 湿度		55±5%RH
Ambient Illumination 亮度	Cosmetic Inspection 外观检验	800-1000 Lux
	Functional Inspection 点灯检验	200~300Lux

2.3 Sampling Conditions /抽样条件:

（1）Quantity to be inspected /批量：Quantity of shipment lot per model /单次运送单一型号数量.

（2）Sampling method /抽样方法：

Sampling Plan /抽样计划		GB/T 2828.1- 2003
		Normal Inspection ， Single Sampling 正常检验、单次抽样
		General inspection level： Ⅱ 一般检验水平：二级
AQL	Major Defect /主要缺陷	0.65
	Minor Defect /次要缺陷	1.0

（3）The classification of Major(MA) and Minor(MI) defects is shown as “3.1 Classification of defects”.

主缺（MA）及次缺（MI）定义于”3.1缺陷分类”.

3.Terms And Definitions /术语和定义

3.1 Classification of defects / 缺陷分类 :

（1）Major defects /主要缺陷:

A major defect is a defect that is likely to result in failure, or to reduce materially the usability of the product for its intended purpose .

可导致产品功能失效或减少产品可用性的缺陷.

（2）Minor defects /次要缺陷:

It will not cause the product to fail and reduce the defects in the effective use and operation of the product.

不会导致产品功能失效和减少产品的有效使用与操作的缺陷.

3.2 Point defects /点状缺陷：

The size of the point defect is defined by the diameter D, and the average diameter of the defect is D=1/2（W+L）.

点状缺陷的大小是由直径 D 定义的，缺陷的平均直径 D=1/2(W+L).

3.3 Linear defects /线状缺陷：

When defect size L≥2W,the defect count as liner type defect.Size of linear defect is defined by length (L) and the maximum width (W).

当缺陷尺寸 L≥2W 时，被视为线状缺陷，线状缺陷是由长度 (L) 和最大宽度 (W) 定义的.

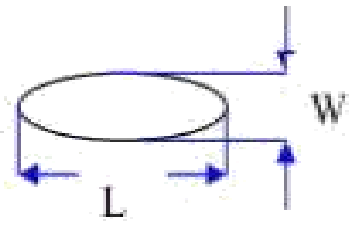

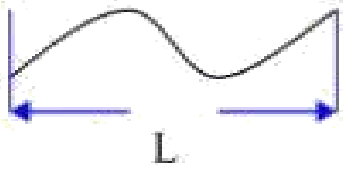

3.4 LCD sub-pixel dot /LCD子像素点

（1）Definition /定义 ：The point defect area is greater than 50% of the LCD sub-pixel area, and is visible through ND5% filter masking .

子像素点缺陷面积大于 50% LCD子像素面积, 且透过 ND5%遮盖是可见的.

（2）The drawing of 1/2 area sub-pixel definition / 1/2 面积的子像素定义绘图:

The 1/2 area sub-pixel can be defined as below one or more of specific shapes

1/2 面积的子像素可以定义为如下一个或多个特定形状图：

3.5 Small bright dot /细碎亮点 ：

Point defects smaller than "LCD sub-pixels" /小于“LCD子像素点”的点缺陷.

（Ratio of Zone I to Zone O /I 区与 O 区比例：1：2：1）

3.6 ND filter inspection method /ND卡的检验方法：

Hold the ND filter about 5cm above the display area, with your eyes 30-40cm away from the panel, and observe for 2~3 seconds.

在显示区域上方大约 5cm 处握住 ND 卡，眼睛距离面板 30-40cm，观察2~3 秒.

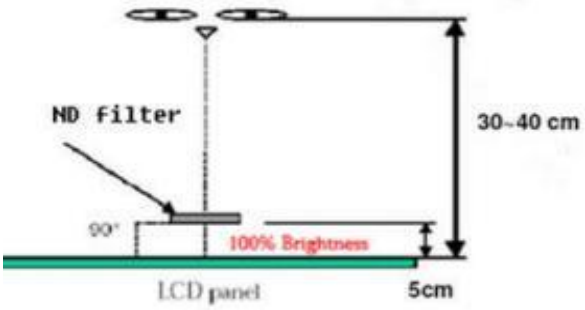

3.7 Any FPC surface problems that do not leak copper on the surface and do not cause functional failure are acceptable.
任何 FPC 表面问题，表面未露铜和不造成功能失效是可以接受的.

3.8 Extraneous substances that can be wiped out ，like Finger point,Particles are not considered as a defect .
可以被擦拭干净的表面物质不视为缺陷 (如手指印，尘粒) .

3.9 Defects that are covered by the material and are not visible to the eye and do not affect the function and use are not considered defects.

会被物料覆盖目视不可见，且不影响功能与使用的缺陷不视为缺陷.

3.10 Panel damage /面板损伤：

Glass damage outside the AA display area that does not affect the effective wiring is acceptable.

AA 显示区域以外的玻璃损伤，不影响有效线路是可以接受的.

3.11 Issues not specified or defined in this acceptance standard shall be handled through friendly negotiation between the two parties.

本允收标准中未规定或定义的问题，双方友好协商处理.

4. Inspection standards /检验标准

4.1 Structural Dimensions /结构尺寸规格

Serial Number 序号	Measurement items /测量项目		Specification /规格	Remark /备注
	名称 /Name	Unit /单位	Tolerance /公差	
1	Outside dimension：Length 尺寸：长	mm /毫米	0.10mm~0.20mm	Please refer to the product specification for detailed dimensions and tolerances 详细的尺寸规格和公差请参考产品规格书
2	Outside dimension：Width 尺寸：宽	mm /毫米	0.10mm~0.2mm	
3	Outside dimension：Thickness 尺寸：厚	mm /毫米	0.20mm~0.30mm	

4.2 Appearance Inspection Specification /外观检验规格

(D： diameter, W： width, L： length, N： quantity, DS： spacing)

Inspection area 检验区域	Inspection items 检验项目	Inspection specifications 检验规格	Defect category 缺陷类别	
Glass 玻璃	Wire(on Array) 线路	Can't be damaged 不能损伤	MA	
	Chipping/corner breaking 崩边/破角	Can't affect the effective lines and functions 不能影响有效线路和功能	MA	
	Edge 边缘	There must be no extensional cracks 不可有延伸性裂纹	MA	
Silicone 硅胶	Silicone coating 硅胶涂布	The height must not exceed the LCD CF surface 高度不能超过LCD CF面		MI
	Glue overflow 溢胶	Can't cover FPC, POL, etc 不能覆盖到FPC、POL等		MI

Inspection area 检验区域	Inspection items 检验项目	Inspection specifications 检验规格	Defect category 缺陷类别	
PCBA FPC Connector 连接器	Appearance 外观	Scratches or injuries are not allowed to cause copper exposure 划伤或损伤不允许表面出现露铜		MI
	Component 元器件	Can't be damaged and lack 不能损伤和缺少	MA	
	Gold finger oxidation 金手指氧化	Not allowed 不允许		MI
	Connection status 连接状况	The connection must be accurate and stable 必须准确稳定连接	MA	
	Break 破裂	Not allowed 不允许	MA	
	Soldering,: false soldering/tinning/tin beads 假焊/连锡/锡珠	Not allowed 不允许	MA	
POL 偏光片	Scratches 划伤	1. W≤0.05mm；L≤5mm，Ignore（忽略） 2. 0.05mm＜W≤0.10mm ; L≤5mm ; N≤3 ; DS≥10mm 3. 0.10mm＜W；5mm＜ L， Not allowable（不允许）		MI
	Dent 凹凸印	1. D≤0.15mm，Ignore（忽略） 2. 0.15mm＜D≤0.30mm；N≤3；DS≥10mm 3. 0.30mm＜D，Not allowable（不允许）		MI
	Bubbles 气泡	1. D≤0.15mm，Ignore（忽略） 2. 0.15mm＜D≤0.30mm；N≤3；DS≥10mm 3. 0.30mm＜D，Not allowable（不允许）		MI
	Point defects 点状不良	1. D≤0.15mm，Ignore（忽略） 2. 0.15mm＜D≤0.30mm；N≤3；DS≥10mm 3. 0.30mm＜D，Not allowable（不允许）		MI
	Edge bubbles 边缘气泡	1. Within 1/2BM of the display area, it is not allowed 显示区往外 1/2BM 区域内，不允许 2. The display area is 1/2 outside the BM area, and it is not controlled 显示区往外1/2BM区域以外，不管控		MI
	Dirty/watermarked 脏污/水印	No dirt/water lines/finger marks are allowed, and must be wiped clean 不允许有脏污/水印/手指印，须擦拭干净方可		MI
	Warping 起翘	Not allowed 不允许		MI
	Attaching offset 贴偏	It is necessary to completely cover the display area outward, within the 1/2BM area, or without leaking POL edges after TP is attached 需完整覆盖显示区往外、1/2BM区以内或贴合TP后不会出现漏偏光片边缘		MI
	Mixture 混料	Mixing different types of POL or not using POL as required by the BOM，not allowed 不允许混贴不同型号的POL或未按BOM要求使用POL	MA	

Inspection area 检验区域	Inspection items 检验项目	Inspection specifications 检验规格	Defect category 缺陷类别	
TP&CG	Point defects 点状不良	1. D≤0.15mm，Ignore（忽略） 2. 0.15mm＜D≤0.30mm；N≤3；DS≥10mm 3. 0.30mm＜D，Not allowable（不允许）		MI
	Scratches 划伤	1. W≤0.05mm；L≤5mm，Ignore（忽略） 2. 0.05mm＜W≤0.10mm ; L≤5mm ; N≤3 ; DS≥10mm 3. 0.10mm＜W；5mm＜ L， Not allowable（不允许） 4. There is a feeling scratch，Not allowable 有感划伤，不允许		MI
	Edges and corners cracked 崩角/崩边	1. Product front / 产品正面： Edge and corner chipping is not allowed 崩角、崩边不允许 2. Product back /产品背面: X≤ 0.5 , Y≤0.5，Z≤1/2T；N≤3；DS≥10mm		MI
	Silk screen 丝印	The silk screen is clear, complete and correct 丝印清晰、完整、内容正确		MI
	Dirty 脏污	Non-wipeable dirt, not allowed 不可擦拭的脏污，不允许		MI
	Broken 破损	Not allowable 不允许	MA	
	Ink color aberration 油墨色差	ΔE>1，Not allowable（不允许）		MI
	Cover pinholes 针孔	1. D≤0.10mm , N≤3 , DS≥10mm，allowable 2. D＞0.10mm，intensive pinholes（密集型针孔），Not allowable（不允许）		MI
	IR holes IR孔	Dirt, deviation, color difference, etc. are not allowed 不允许脏污、偏位、色差等		MI
BL 背光	Backlight separation 背光分离	Not allowable 不允许		MI
	Deformation of rubber iron and rubber frame 胶铁、胶框变形	Use the plug gauge 0.3mm on the flat surface and can snap in and judge NG 在平面上使用塞规0.3mm卡翘曲位置，能卡进判定NG		MI
	The iron frame is oxidized and not tightened 铁框氧化、卡不紧	Not allowable 不允许		MI
	Backlight sticky solder beads, glue, etc 背面粘锡珠、残胶等	Not allowable 不允许		MI
	Lnkjet coding，Barcode， QR code 喷码/条码/二维码	The lnkjet coding is clear and complete, the barcode and QR code can be scanned normally, and the content and format match 喷码清晰完整、条码和二维码可正常扫描，内容和格式相符		MI
	Accessories (protective film, double-sided tape, insulating adhesive, etc.) 辅料（保护膜、双面胶、绝缘胶等）	Defects such as missing pastes, sticking deviations, defects, and fractures are not allowed 不允许有漏贴、贴偏、残缺、断裂等缺陷		MI

4.3 Electrical test specifications /电性检查规格
(D： diameter, W： width, L： length, N： quantity, DS： spacing)

Inspection items 检验项目	Inspection specifications 检验规格	Defect category 缺陷类别	
Glass bright spots/dark spots 玻璃亮点/暗点	1. D≤0.15mm，Ignore（忽略） 2. 0.15mm＜D≤0.30mm；N≤3；DS≥10mm 3. 0.30mm＜D，Not allowable（不允许）		MI
Mura	Use ND5% filter masking, visual invisibility is OK, 200~300Lux 使用ND5%遮盖，目视不可见即为OK，200~300Lux		MI
Small bright dot 细碎亮点	Use ND5% filter masking, visual invisibility is OK 使用ND5%遮盖，目视不可见即为OK		MI
Light leakage 漏光	1. Use ND5% filter masking, visual invisibility is OK 使用ND5%遮盖，目视不可见即为OK 2. If necessary, sign off on the sample 必要时，签限定样		MI
Backlight black/white dots 背光黑点/白点	1. D≤0.15mm，Ignore（忽略） 2. 0.15mm＜D≤0.30mm；N≤3；DS≥10mm 3. 0.30mm＜D，Not allowable（不允许）		MI
Linear foreign bodies 线状异物（异物毛丝等）	1. W≤0.05mm；L≤5mm，Ignore（忽略） 2. 0.05mm＜W≤0.10mm ; L≤5mm ; N≤3 ; DS≥10mm 3. 0.10mm＜W；5mm＜ L， Not allowable（不允许）		MI
Black/White Print 黑印/白印	Use ND5% filter masking, visual invisibility is OK 使用ND5%遮盖，目视不可见即为OK		MI
The display is uneven 显示不均匀	Use ND5% filter masking, visual invisibility is OK 使用ND5%遮盖，目视不可见即为OK		MI
The brightness is uneven 亮度不均匀	Brightness uniformity＜85.0%，Not allowable 亮度均匀性＜85.0%，不允许		MI
Displacement of the membrane 膜材移位	Not allowable 不允许		MI
Interference pattern/Newtonian pattern 干涉纹/牛顿纹	Not allowable 不允许		MI
Display abnormal 显示异常	Not allowable 不允许	MA	
No display 无显示	Not allowable 不允许	MA	
Line/Missing Drawing 线条/缺画	Not allowable 不允许	MA	
Splash screen 闪屏	Not allowable 不允许	MA	
LCD grid LCD网格	Not allowable 不允许	MA	
Afterimage 残影	Not allowable 不允许	MA	
Wrong viewing angle 视角错误	Not allowable 不允许	MA	
No touch 无触摸	Not allowable 不允许	MA	
Touch the jump point 触摸跳点	Not allowable 不允许	MA	
Not sensitive 触摸不灵敏	Not allowable 不允许	MA	