Request information

PRODUCT SPECIFICATION

TFT-LCD MODULE

Module No: 100289-01

☑ Preliminary Specification

☐ Approval Specification

Designed by	Checked by	Approved by

Final Approval by Customer

Approved by	Comment

For more information, contact us:

WWW.DCLTEK.COM | 1-800-407-8917 | SALES@DCLTEK.COM

※The specification of “TBD” should refer to the measured value of sample . If there is difference between the design specification and measured value, we naturally shall negotiate and agree to solution with customer.

This document contains confidential and proprietary information of DCL Technologies, Inc. It is provided solely for the recipient's evaluation and may not be reproduced, disclosed, or distributed, in whole or in part, without the prior written consent of DCL Technologies, Inc.

1.0 Document Revision History

Version	Contents	Date	Note
V0	Initial version	2023.10.06	

2. General Specifications

No.	Item	Specification	Unit	Remar
1	LCD Size	TFT" 3.5	inch	-
2	Panel Type	a-Si IPS	-	-
3	Display Resolution	640xRGBx480	Pixel	-
4	DisplayMode	NormallyBlack	-	-
5	Number of Colors	16.7M	-	-
6	Viewing Direction	ALL	-	Note
7	LCM outline dimension	74.50 (H) X62.40 (V) x2.29 (D)	mm	Note
8	Active Area	70.08(H)x52.56V)	mm	Note
9	Pixel Pitch	0.073(H)x0.219(V)	mm	-
10	Weight	TBD	g	-
11	Driver IC	NV3052	bit	-
12	Light Source	12 white LED	-	-
13	Interface	24-bit RGB	-	-

Note 1: Please refer to the mechanical drawing ;

3.Mechanical Drawing

由 Autodesk 教育版产品制作

FrontView

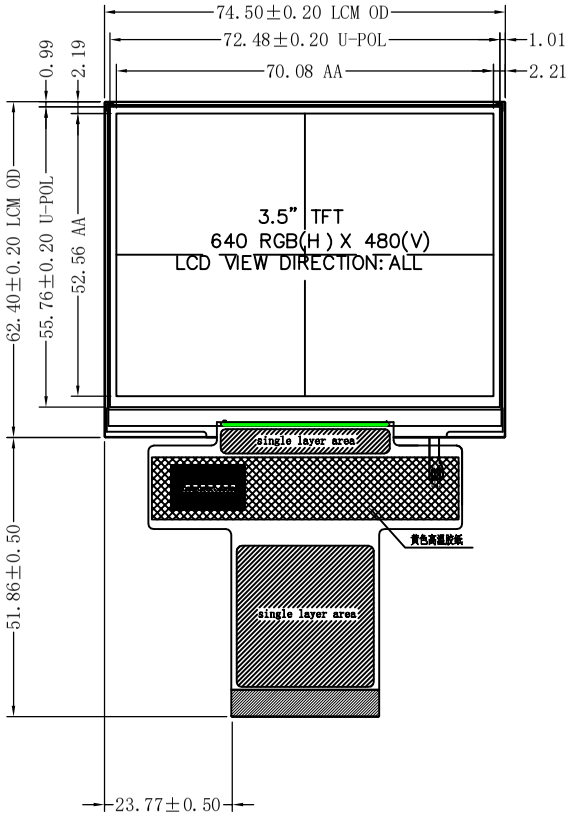

Side View

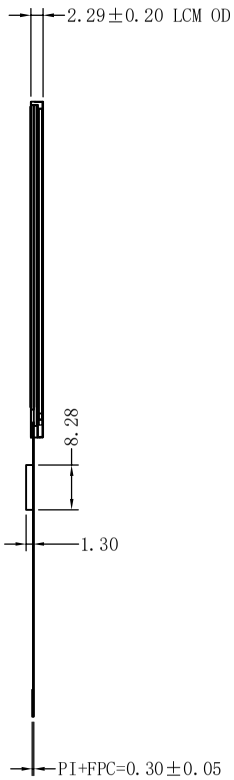

Back View

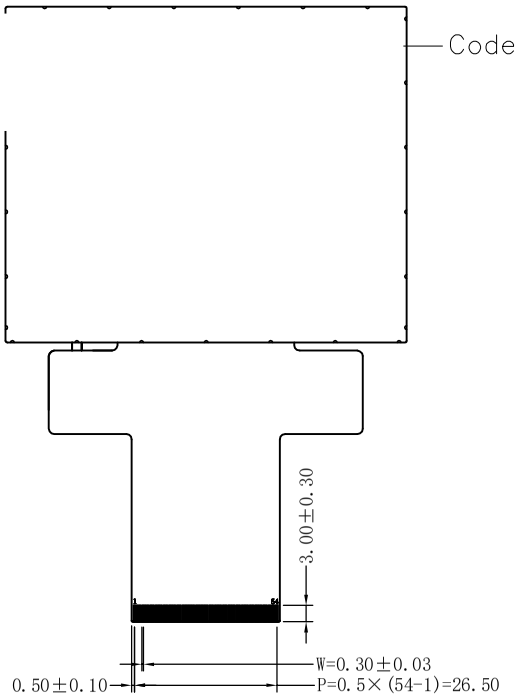

PIN NO.	SIGNAL	PIN NO.	SIGNAL
1	LEDK	28	R0
2	LEDK	29	R1
3	LEDA	30	R2
4	LEDA	31	R3
5	NC	32	R4
6	NC	33	R5
7	SPSD□	34	R6
8	RESET	35	R7
9	SPENA	36	HSYNC
10	SPCLK	37	VSYNC
11	SPDAT	38	D□TCLK
12	B0	39	(NC)AVDI
13	B1	40	(NC)AVDI
14	B2	41	VCCI□
15	B3	42	VCC
16	B4	43	NC
17	B5	44	(NC)VGL
18	B6	45	(NC)VGL
19	B7	46	NC
20	G0	47	(NC)VGH
21	G1	48	XR
22	G2	49	YD
23	G3	50	XL
24	G4	51	YU
25	G5	52	DEN
26	G6	53	DGND
27	G7	54	DGND

Notes:
1. Display : 3.5″, TFT
2. Resolution: 640xRGBx480
3. LCD Viewing Direction: 85/85/85/85
4. Drive IC:NV3052
5. Display Mode: Normally Black/Transmissive
6. LCM Luminance:400cd/m2(Typ)
7. unmark Tolerance:±0.2
8. OPERATING TEMP: -20° C~ +70° C
9. STORAGE TEMP: -30° C~ +80° C
10. Requirements on Environmental Protection: ROHS

LED CIRCUIT DIAGRAM:
IF =40mA,VF=19.2V

REV	DESCRIPTION	DATE
3		
2		
1		
0	NEW	2023.10.

DCLATEK

SCALE:1/1	UNIT:mm	PAGE:1/1	Approve	Check	Drawn
Part No:			VER:V0		
Customer No:					

由 Autodesk 教育版产品制作

4.Pin Assignments

Pin No.	Symbol	Function
1-2	LEDK	Backlight cathode
3-4	LEDA	Backlight anode
5-7	NC	Not connect
8	RESET	Hardware Reset
9	SPENA	No connector(Serial interface chip enable.CS)
10	SPCLK	No connector(Serial interface clock input.SCL)
11	SPDAT	No connector(Serial interface data input/output.SDA)
12-19	B0-B7	8-bit blue data bus
20-27	G0-G7	8-bit green data bus
28-35	R0-R7	8-bit red data bus
36	HSYNC	Horizontal sync signal
37	VSYNC	Vertical sync signal
38	DOTCLK	Pixel clock input pin
39-40	NC	Not connect
41	VCCIO	Power supply for I/O Pins
42	VCC	Power supply for analog circuit
43	NC	Not connect
44-45	NC	Not connect
46	NC	Not connect
47	NC	Not connect
48	NC	Not connect
49	NC	Not connect
50	NC	Not connect
51	NC	Not connect
52	DEN	Data input enable
53	DGND	Ground
54	DGND	Ground

5.Electrical Specification

5.1 Absolute Maximum Ratings

Item	Symbol	Value	Unit	Remark
Analog Power Supply Voltage	VCI	-0.3~+3.3	V	-
I/O Power Supply Voltage	IOVCC	-0.3~+3.3	V	-

5.2 Typical Operation Conditions

Item	Symbol	Min.	Typ.	Max.	Unit
Analog Supply Voltage	VCI	3.0	3.3	3.3	V
I/O Supply Voltage	IOVCC	1.65	1.8	3.3	V
Input High Voltage	V_{IH}	0.8*IOVCC	-	IOVCC	V
Input Low Voltage	V_{IL}	0	-	0.2*IOVCC	V
Output High Voltage	V_{OH}	0.8*IOVCC	-	-	V
Output Low Voltage	V_{OL}	-	-	0.2*IOVCC	V

5.3 Backlight Circuit Characteristics

PARAMETER	Sym.	Min.	Typ.	Max.	Unit	Test Condition	Note
LED Current	IF	–	40	–	mA	–	–
LED Voltage	VF	–	19.2	–	V	–	–
LCM_Brightness	Lv	–	400	–	Nits	@CA310	
Life Time		–	30000		Hr.	I≦40mA	–
Color	White						

Note (1) Permanent damage may occur to the LCD module if beyond this specification. Functional operati

6. RGB Interface Timing

The timing chart of RGB interface DE mode is shown as follows.

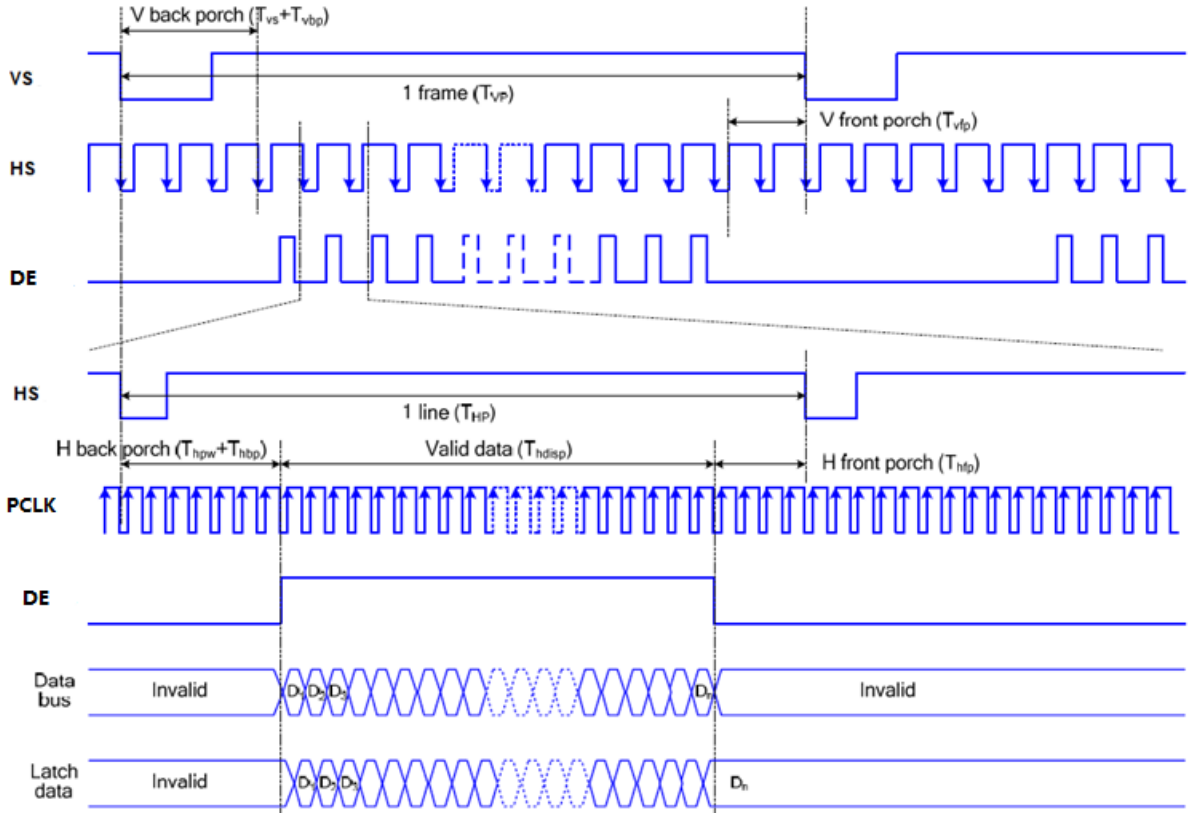

Timing Chart of Signals in RGB Interface DE Mode

Note: The setting of front porch and back porch in host must match that in IC as this mode.

6.1. AC characteristic

6.1.1. Reset timing characteristics

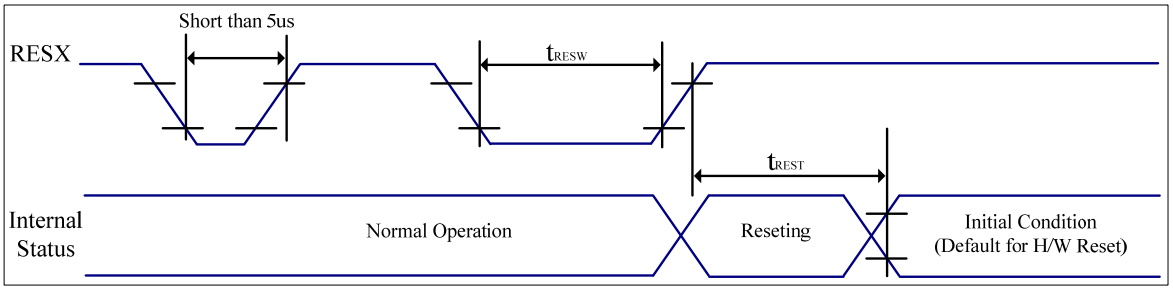

VSS=0V, IOVCC=1.65V to 3.6V, VCI=2.5V to 6.0V,Ta = -30℃ to 70℃

Symbol	Parameter	Related Pins	MIN	TYP	MAX	Note	Unit
t_{RESW}	*1) Reset low pulse width	RESX	10	-	-	-	us
t_{REST}	*2) Reset complete time	-	-	-	5	When reset applied during Sleep in mode	ms
		-	-	-	120	When reset applied during Sleep out mode	ms

Table: Reset input timing

Note 1: Due to an electrostatic discharge on RESX line,spike does not cause irregular system reset according to the table below.

RESX Pulse	Action
Shorter than 5us	Reset Rejected
Longer than 10us	Reset
Between 5us and 10us	Reset starts (It depends on voltage and temperature condition.)

Note 2: During the resetting period, the display will be blanked (The display is entering blanking sequence, which maximum time is 120ms, when Reset Starts in Sleep Out mode. The display remains the blank state in Sleep In mode) , then return to default condition for H/W reset.

Note 3: During Reset Complete Time, ID1/ID2/ID3 and VCOM value in OTP will be latched to internal register. After a rising edge of RESX, there is a H/W reset complete time (Trest) which lasted 5ms..The loading operation will be done every time during this reset.

Note 4: Spike Rejection also applies during a valid reset pulse as shown below:

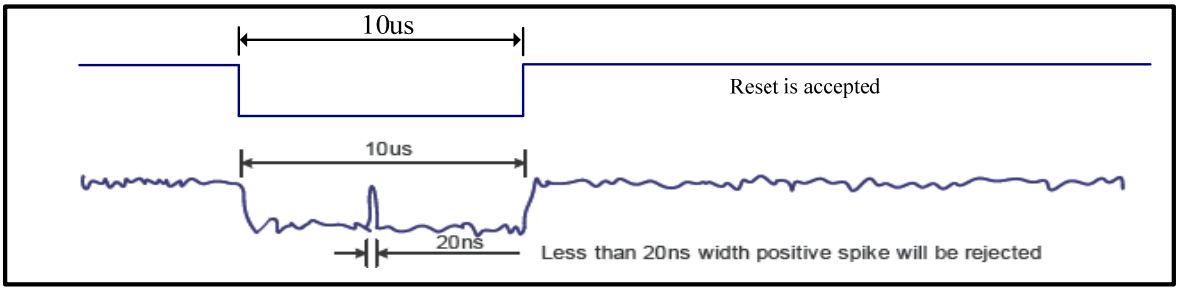

Note 5. It is necessary to wait 5msec after releasing RESX before sending commands. Also Sleep Out command cannot be sent for 120 msec.

6.1.2. Case 1 – RESX line is held high or unstable by host at power on

If RESX line is held High or unstable by the host during Power On, then a Hardware Reset must be applied after both VCI and IOVCC have been applied – otherwise correct functionality is not guaranteed. There is no timing restriction upon this hardware reset.

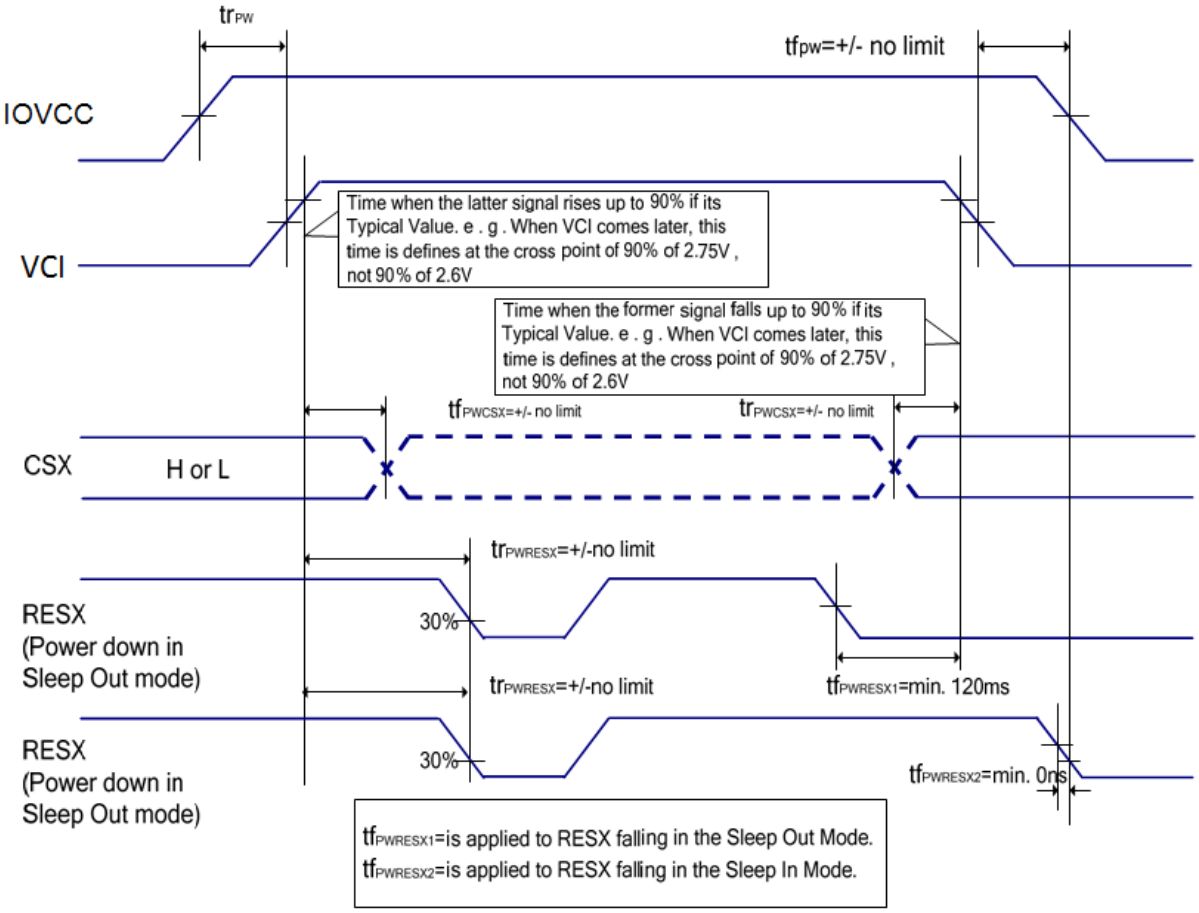

6.1.3. Case 2 – RESX line is held low or unstable by host at power on

If RESX line is held Low (and stable) by the host during Power On, then the RESX must be held low for minimum 10sec after both VCI and IOVCC have been applied.

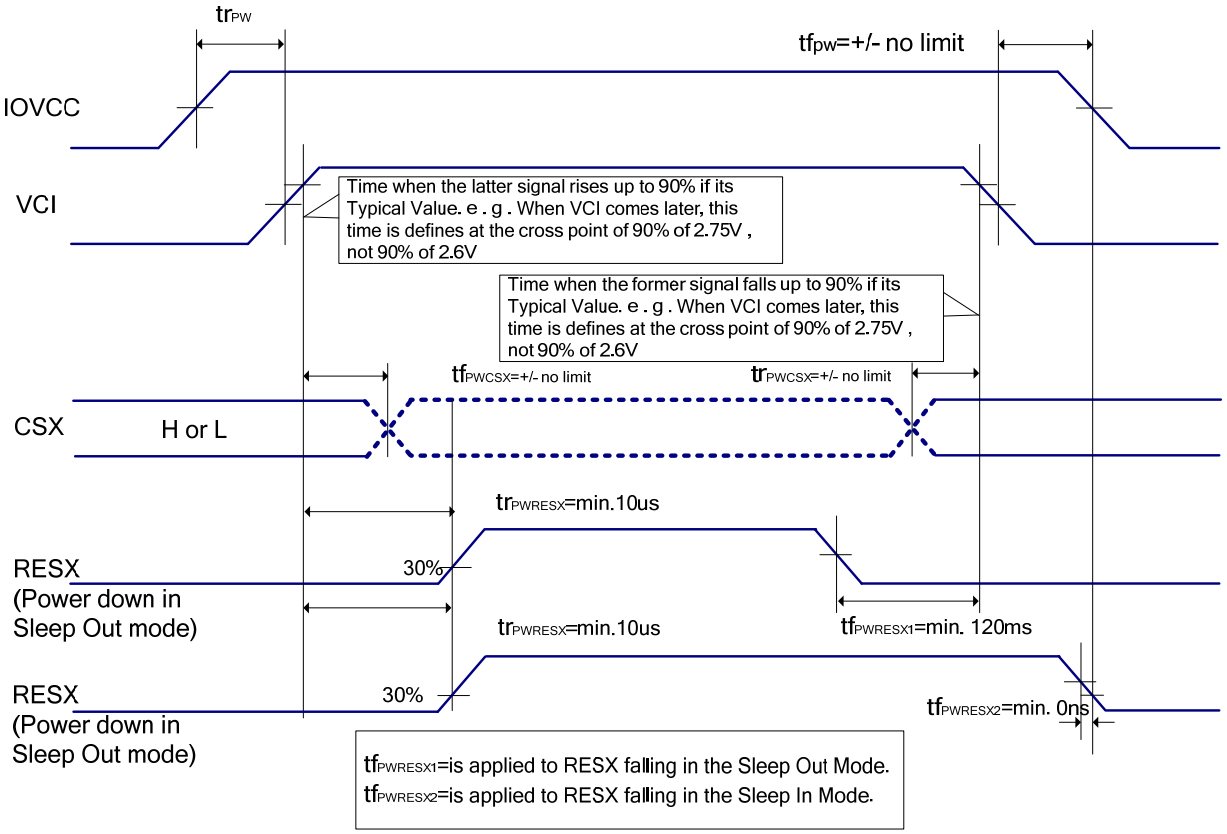

6.1.4. Uncontrolled power off

The uncontrolled power off means a situation when e.g. there is removed a battery without the controlled power off sequence. There will not be any damages for the display module or the display module will not cause any damages for the host or lines of the interface.

At an uncontrolled power off the display will go blank and there will not be any visible effects within (TBD) second on the display (blank display) and remains blank until “Power On Sequence” powers it up.

7.Optical Specification

7.1 LCM Optical Characteristics

Item		Symbol	Condition	Min.	Typ.	Max.	Unit
Viewing Angle Range	Left	θ_L	CR≧10	-	85	-	degree
	Right	θ_R		-	85	-	
	Top	θ_T		-	85	-	
	Bottom	θ_B		-	85	-	
Response Time		Ton+Toff	θ=Φ=0˚	-	25	50	ms
Contrast Ratio		CR	θ=Φ=0˚	-	800	-	-
Luminance		L	θ=Φ=0˚	-	400	-	cd/m^2
Color Chromaticity (CIE1931) 色坐标	White	W_x	Normal θ=Φ=0˚	0.295	0.315	0.335	-
		W_y		0.323	0.343	0.363	
	Red	R_x		-	-	-	
		R_y		-	-	-	
	Green	G_x		-	-	-	
		G_y		-	-	-	
	Blue	B_x		-	-	-	
		B_y		-	-	-	
Uniformity 均匀度		U_L	θ=Φ=0˚	80	-	-	%
Flicker 闪烁		-	-	No Visible			-

7.2 Measurement system

7.2.1 LCM Viewing Angle

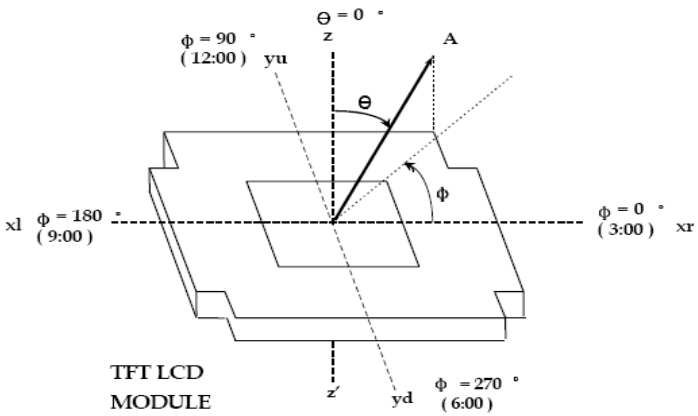

Viewing angle is the angle at which the contrast ratio is greater than 10.The angles are determined for the horizontal or x axis and the vertical or y axis with respect to the z axis which is normal to the LCD surface.

7.2.2 Response time

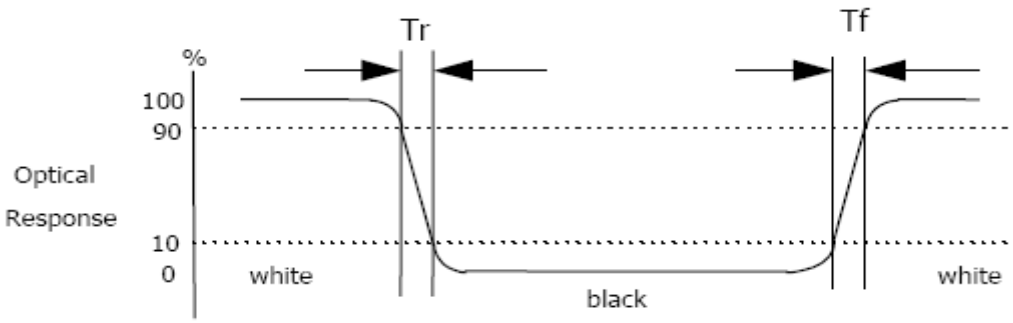

Response time is the time required for the display to transition from white to black (Rising time, Tr) and from black to white (Falling time, Tf) for additional information.

7.2.3 Contrast Ratio (CR)

Contrast Ratio (CR) is defined mathematically as:

$$\text{Contrast Ratio} = \frac{\text{Surface Luminance with all white pixels}}{\text{Surface Luminance with all black pixels}}$$

Surface luminance is the center point across the LCD surface 500mm from the surface with all pixels displaying white.

8. Reliability test items

No.	Test Item	Test Condition	Notes
1	High Temp. Storage	+80°C / 48H	1. Functional test isOK. Missing Segment,short, unclear segment non-display,display abnormally and liquid crystal leakare un-allowed. 2. No low temperature bubbles,end seal loose andfall, frame rainbow.
2	Low Temp. Storage	-30°C / 48H	
3	High Tempe. Operating	+70°C / 48H	
4	Low Tempe. Operating	-20°C / 48H	
5	High Temperature /Humidity storage	50°C x 90%RH /48H	
6	Thermal and cold shock	Static state， -20℃（30min） ~60℃（30min），50 cycles	
7	ESD test	± 2KV,Human Body Mode, 150pF/330Ω; ±4KV, Air Mode, 150pF/330Ω;	

Note: All tests above are practiced at module type.

There is no display function NG issue occurred, All the cosmetic specification is judged before the reliability stress.

9.0 General Precaution

9.1 Use Restriction

This product is not authorized for use in life supporting systems, aircraft navigation control systems, military systems and any other application where performance failure could be life-threatening or otherwise catastrophic.

9.2 Asembly Precaytton

1、Please use the mounting hole on the module side in installing and do not bending or wrenching LCD in assembling. And please do not drop, bend or twist LCD module in handling.

2、Please design display housing in accordance with the following guide lines.

3、Housing case must be destined carefully so as not to put stresses on LCD all sides and not to wrench module. The stresses may cause non-uniformity even if there is no non-uniformity statically.

4、Keep sufficient clearance between LCD module back surface and housing when the LCD module is mounted. The clearance in the design is recommended taking into account the tolerance of LCD module thickness and mounting structure height on the housing.

5、 Please do not push or scratch LCD panel surface with any-thing hard. And do not soil LCD panel surface by touching with bare hands. (Polarizer film, surface of LCD panel is easy to be flawed.)

6、Please do not press any parts on the rear side such as source IC, gate IC, and FPC during handling LCD module. If pressing rear part is unavoidable, handle the LCD module with care not to damage them.

7、Please wipe out LCD panel surface with absorbent cotton or soft cloth in case of it being soiled.

8、 Please wipe out drops of adhesives like saliva and water on LCD panel surface immediately. They might damage to cause panel surface variation and color change. 11.2.7 Please do not take a LCD module to pieces and reconstruct it. Resolving and reconstructing modules may cause them not to work well.

9.3 Disassembling or Modification

Do not disassemble or modify the module. It may damage sensitive parts inside LCD module, and may cause scratches or dust on the display. does not warrant the module, if customers disassemble or modify the module.

9.4 Breakage of LCD Panel

1 、If LCD panel is broken and liquid crystal spills out, do not ingest or inhale liquid crystal, and do not contact liquid crystal with skin.

2、 If liquid crystal contacts mouth or eyes, rinse out with water immediately.

3、 If liquid crystal contacts skin or cloths, wash it off immediately with alcohol and rinse thoroughly with water.

4、 Handle carefully with chips of glass that may cause injury, when the glass is broken.

9.5 Absolute Maximum Ratings and Power Protection Circuit

1、Do not exceed the absolute maximum rating values, such as the supply voltage variation, input voltage variation, variation in parts' parameters, environmental temperature, etc., otherwise LCD module may be damaged.

2、 Please do not leave LCD module in the environment of high humidity and high temperature for a long time.

3、 It's recommended employing protection circuit for power supply.

11.6 Operation

1 、Do not touch, push or rub the polarizer with anything harder than HB pencil lead.Use fingerstalls of soft gloves in order to keep clean display quality, when persons handle the LCD module for incoming inspection or assembly.

2、 When the surface is dusty, please wipe gently with absorbent cotton or other soft material.

3 、Wipe off saliva or water drops as soon as possible. If saliva or water drops contact with polarizer for a long time, they may causes deformation or color fading.

4 、When cleaning the adhesives, please use absorbent cotton wetted with a little petroleum benzine or other adequate solvent.

9.7 Static Electricity

1 、Protection film must remove very slowly from the surface of LCD module to prevent from electrostatic occurrence.

2、 Because LCD module uses CMOS-IC on TFT-LCD panel, it is very weak to electrostatic discharge. Please be careful with electrostatic discharge.

3 、Persons who handle the module should be grounded through adequate methods.

9.8 Disposal

When disposing LCD module, obey the local environmental regulations.

9.9 OTHERS

1 、A strong incident light into LCD panel might cause display characteristics' changing inferior because of polarizer film, color filter, and other materials becoming inferior. Please do not expose LCD module direct sunlight land strong UV rays.

2、 Please pay attention to a panel side of LCD module not to contact with other materials in preserving it alone.

3、 For the packaging box, please pay attention to the followings:

4、Packaging box and inner case for LCD are designed to protect the LCDs from the damage or scratching during transportation. Please do not open except picking LCDs up from the box.

5、 Please do not pile them up more than 6 boxes. (They are not designed so.) And please do not turn over.

6、 Please handle packaging box with care not to give them sudden shock and vibrations. And also please do not throw them up.

7、Packing box and inner case for LCDs are made of cardboard. So please pay attention not to get them wet. (Such like keeping them in high humidity or wet place can occur getting them wet.)

10.0 Packing form-TBD

DCLTEK

深圳市丽台电子有限公司

Quality Inspection Standards

品质允收标准

Model No. / 产品型号: **Applies 0.95~5.0 Inch Touch Display Screen**
Updated Date /生效日期: **2022-05-20**
Version / 版 本: **A0**
Customer confirmation : _____

Record of Revision /修订履历

Version /版本	Revision Record /修订内容	Reviser /修订人	Revision Date /修订日期
V0	首发 / Starting		2022.05.20

1.Scope of application /适用范围.

This document shall be applied to 0.95~5.0 inch touch display screen.

本文件适用于0.95~5.0 寸触摸显示屏.

2.Inspection conditions and environment /检验条件与环境.

2. 1 Inspection Conditions /检验条件:

(1) Inspection Distance /检测距离: 35cm ±5cm.

(2) Check time /检验时间：

Displays performance test /功能测试：2~3S /Image，Cosmetic Inspection /外观检验:10~12S.

(3) Check the viewing angle /检验视角:

Light-on Inspection Angle /点灯检验角度： ±45°.

Cosmetic Inspection Angle /外观检验角度：±45°.

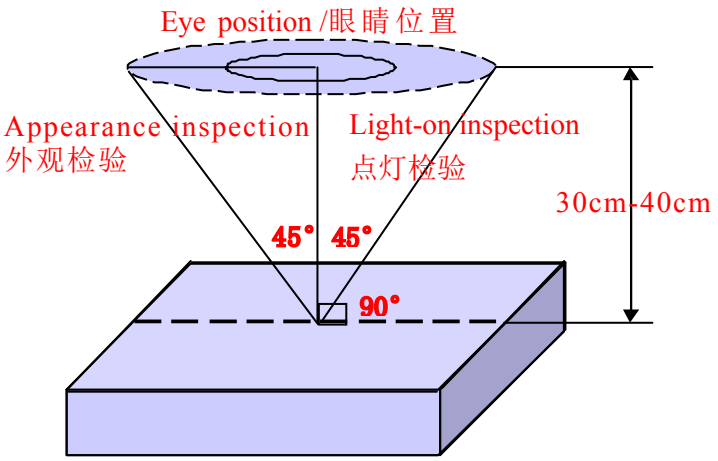

(Perpendicular to LCD panel surface /垂直于LCD表面)

2.2 Inspection environment /检验环境:

Ambient Temperature 温度		25℃±5℃
Ambient Humidity 湿度		55±5%RH
Ambient Illumination 亮度	Cosmetic Inspection 外观检验	800-1000 Lux
	Functional Inspection 点灯检验	200~300Lux

2.3 Sampling Conditions /抽样条件:

（1）Quantity to be inspected /批量：Quantity of shipment lot per model /单次运送单一型号数量.

（2）Sampling method /抽样方法：

Sampling Plan /抽样计划		GB/T 2828.1- 2003
		Normal Inspection ， Single Sampling 正常检验、单次抽样
		General inspection level： Ⅱ 一般检验水平：二级
AQL	Major Defect /主要缺陷	0.65
	Minor Defect /次要缺陷	1.0

（3）The classification of Major(MA) and Minor(MI) defects is shown as “3.1 Classification of defects”.

主缺（MA）及次缺（MI）定义于”3.1缺陷分类”.

3.Terms And Definitions /术语和定义

3.1 Classification of defects / 缺陷分类 :

（1）Major defects /主要缺陷:

A major defect is a defect that is likely to result in failure, or to reduce materially the usability of the product for its intended purpose .

可导致产品功能失效或减少产品可用性的缺陷.

（2）Minor defects /次要缺陷:

It will not cause the product to fail and reduce the defects in the effective use and operation of the product.

不会导致产品功能失效和减少产品的有效使用与操作的缺陷.

3.2 Point defects /点状缺陷：

The size of the point defect is defined by the diameter D, and the average diameter of the defect is D=1/2（W+L）.

点状缺陷的大小是由直径 D 定义的，缺陷的平均直径 D=1/2(W+L).

3.3 Linear defects /线状缺陷：

When defect size L≥2W,the defect count as liner type defect.Size of linear defect is defined by length (L) and the maximum width (W).

当缺陷尺寸 L≥2W 时，被视为线状缺陷，线状缺陷是由长度 (L) 和最大宽度 (W) 定义的.

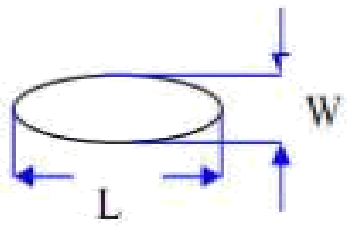

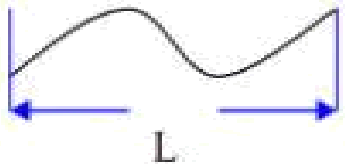

3.4 LCD sub-pixel dot /LCD子像素点

（1）Definition /定义：The point defect area is greater than 50% of the LCD sub-pixel area, and is visible through ND5% filter masking .

子像素点缺陷面积大于 50% LCD子像素面积, 且透过 ND5%遮盖是可见的.

（2）The drawing of 1/2 area sub-pixel definition / 1/2 面积的子像素定义绘图:

The 1/2 area sub-pixel can be defined as below one or more of specific shapes

1/2 面积的子像素可以定义为如下一个或多个特定形状图：

3.5 Small bright dot /细碎亮点：

Point defects smaller than "LCD sub-pixels" /小于“LCD子像素点”的点缺陷.

（Ratio of Zone I to Zone O /I 区与 O 区比例：1：2：1）

3.6 ND filter inspection method /ND卡的检验方法：

Hold the ND filter about 5cm above the display area, with your eyes 30-40cm away from the panel, and observe for 2~3 seconds.

在显示区域上方大约 5cm 处握住 ND 卡，眼睛距离面板 30-40cm，观察2~3 秒.

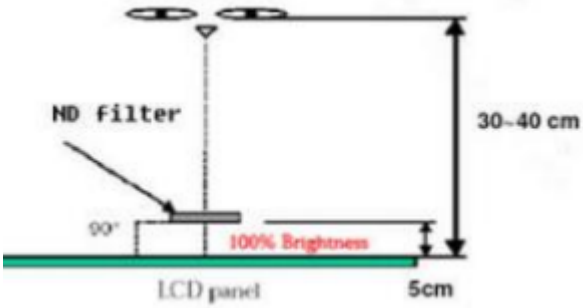

3.7 Any FPC surface problems that do not leak copper on the surface and do not cause functional failure are acceptable.
任何 FPC 表面问题，表面未露铜和不造成功能失效是可以接受的.

3.8 Extraneous substances that can be wiped out，like Finger point,Particles are not considered as a defect .
可以被擦拭干净的表面物质不视为缺陷 (如手指印，尘粒) .

3.9 Defects that are covered by the material and are not visible to the eye and do not affect the function and use are not considered defects.

会被物料覆盖目视不可见，且不影响功能与使用的缺陷不视为缺陷.

3.10 Panel damage /面板损伤：

Glass damage outside the AA display area that does not affect the effective wiring is acceptable.

AA 显示区域以外的玻璃损伤，不影响有效线路是可以接受的.

3.11 Issues not specified or defined in this acceptance standard shall be handled through friendly negotiation between the two parties.

本允收标准中未规定或定义的问题，双方友好协商处理.

4. Inspection standards /检验标准

4.1 Structural Dimensions /结构尺寸规格

Serial Number 序号	Measurement items /测量项目		Specification /规格	Remark /备注
	名称 /Name	Unit /单位	Tolerance /公差	
1	Outside dimension：Length 尺寸：长	mm /毫米	0.10mm~0.20mm	Please refer to the product specification for detailed dimensions and tolerances 详细的尺寸规格和公差请参考产品规格书
2	Outside dimension：Width 尺寸：宽	mm /毫米	0.10mm~0.2mm	
3	Outside dimension：Thickness 尺寸：厚	mm /毫米	0.20mm~0.30mm	

4.2 Appearance Inspection Specification /外观检验规格

(D： diameter, W： width, L： length, N： quantity, DS： spacing)

Inspection area 检验区域	Inspection items 检验项目	Inspection specifications 检验规格	Defect category 缺陷类别	
Glass 玻璃	Wire(on Array) 线路	Can't be damaged 不能损伤	MA	
	Chipping/corner breaking 崩边/破角	Can't affect the effective lines and functions 不能影响有效线路和功能	MA	
	Edge 边缘	There must be no extensional cracks 不可有延伸性裂纹	MA	
Silicone 硅胶	Silicone coating 硅胶涂布	The height must not exceed the LCD CF surface 高度不能超过LCD CF面		MI
	Glue overflow 溢胶	Can't cover FPC, POL, etc 不能覆盖到FPC、POL等		MI

Inspection area 检验区域	Inspection items 检验项目	Inspection specifications 检验规格	Defect category 缺陷类别	
PCBA FPC Connector 连接器	Appearance 外观	Scratches or injuries are not allowed to cause copper exposure 划伤或损伤不允许表面出现露铜		MI
	Component 元器件	Can't be damaged and lack 不能损伤和缺少	MA	
	Gold finger oxidation 金手指氧化	Not allowed 不允许		MI
	Connection status 连接状况	The connection must be accurate and stable 必须准确稳定连接	MA	
	Break 破裂	Not allowed 不允许	MA	
	Soldering,: false soldering/tinning/tin beads 假焊/连锡/锡珠	Not allowed 不允许	MA	
POL 偏光片	Scratches 划伤	1. W≤0.05mm；L≤5mm，Ignore（忽略） 2. 0.05mm＜W≤0.10mm ; L≤5mm ; N≤3 ; DS≥10mm 3. 0.10mm＜W；5mm＜ L， Not allowable（不允许）		MI
	Dent 凹凸印	1. D≤0.15mm，Ignore（忽略） 2. 0.15mm＜D≤0.30mm；N≤3；DS≥10mm 3. 0.30mm＜D，Not allowable（不允许）		MI
	Bubbles 气泡	1. D≤0.15mm，Ignore（忽略） 2. 0.15mm＜D≤0.30mm；N≤3；DS≥10mm 3. 0.30mm＜D，Not allowable（不允许）		MI
	Point defects 点状不良	1. D≤0.15mm，Ignore（忽略） 2. 0.15mm＜D≤0.30mm；N≤3；DS≥10mm 3. 0.30mm＜D，Not allowable（不允许）		MI
	Edge bubbles 边缘气泡	1. Within 1/2BM of the display area, it is not allowed 显示区往外 1/2BM 区域内，不允许 2. The display area is 1/2 outside the BM area, and it is not controlled 显示区往外1/2BM区域以外，不管控		MI
	Dirty/watermarked 脏污/水印	No dirt/water lines/finger marks are allowed, and must be wiped clean 不允许有脏污/水印/手指印，须擦拭干净方可		MI
	Warping 起翘	Not allowed 不允许		MI
	Attaching offset 贴偏	It is necessary to completely cover the display area outward, within the 1/2BM area, or without leaking POL edges after TP is attached 需完整覆盖显示区往外、1/2BM区以内或贴合TP后不会出现漏偏光片边缘		MI
	Mixture 混料	Mixing different types of POL or not using POL as required by the BOM，not allowed 不允许混贴不同型号的POL或未按BOM要求使用POL	MA	

Inspection area 检验区域	Inspection items 检验项目	Inspection specifications 检验规格	Defect category 缺陷类别	
TP&CG	Point defects 点状不良	1. D≤0.15mm，Ignore（忽略） 2. 0.15mm＜D≤0.30mm；N≤3；DS≥10mm 3. 0.30mm＜D，Not allowable（不允许）		MI
	Scratches 划伤	1. W≤0.05mm；L≤5mm，Ignore（忽略） 2. 0.05mm＜W≤0.10mm ; L≤5mm ; N≤3 ; DS≥10mm 3. 0.10mm＜W；5mm＜ L， Not allowable（不允许） 4. There is a feeling scratch，Not allowable 有感划伤，不允许		MI
	Edges and corners cracked 崩角/崩边	1. Product front /产品正面： Edge and corner chipping is not allowed 崩角、崩边不允许 2. Product back /产品背面: X≤ 0.5 , Y≤0.5，Z≤1/2T；N≤3；DS≥10mm		MI
	Silk screen 丝印	The silk screen is clear, complete and correct 丝印清晰、完整、内容正确		MI
	Dirty 脏污	Non-wipeable dirt, not allowed 不可擦拭的脏污，不允许		MI
	Broken 破损	Not allowable 不允许	MA	
	Ink color aberration 油墨色差	ΔE>1，Not allowable（不允许）		MI
	Cover pinholes 针孔	1. D≤0.10mm , N≤3 , DS≥10mm，allowable 2. D＞0.10mm，intensive pinholes（密集型针孔），Not allowable（不允许）		MI
	IR holes IR孔	Dirt, deviation, color difference, etc. are not allowed 不允许脏污、偏位、色差等		MI
BL 背光	Backlight separation 背光分离	Not allowable 不允许		MI
	Deformation of rubber iron and rubber frame 胶铁、胶框变形	Use the plug gauge 0.3mm on the flat surface and can snap in and judge NG 在平面上使用塞规0.3mm卡翘曲位置，能卡进判定NG		MI
	The iron frame is oxidized and not tightened 铁框氧化、卡不紧	Not allowable 不允许		MI
	Backlight sticky solder beads, glue, etc 背面粘锡珠、残胶等	Not allowable 不允许		MI
	Lnkjet coding，Barcode， QR code 喷码/条码/二维码	The lnkjet coding is clear and complete, the barcode and QR code can be scanned normally, and the content and format match 喷码清晰完整、条码和二维码可正常扫描，内容和格式相符		MI
	Accessories (protective film, double-sided tape, insulating adhesive, etc.) 辅料（保护膜、双面胶、绝缘胶等）	Defects such as missing pastes, sticking deviations, defects, and fractures are not allowed 不允许有漏贴、贴偏、残缺、断裂等缺陷		MI

4.3 Electrical test specifications /电性检查规格
(D： diameter, W： width, L： length, N： quantity, DS： spacing)

Inspection items 检验项目	Inspection specifications 检验规格	Defect category 缺陷类别	
Glass bright spots/dark spots 玻璃亮点/暗点	1. D≤0.15mm，Ignore（忽略） 2. 0.15mm＜D≤0.30mm；N≤3；DS≥10mm 3. 0.30mm＜D，Not allowable（不允许）		MI
Mura	Use ND5% filter masking, visual invisibility is OK, 200~300Lux 使用ND5%遮盖，目视不可见即为OK，200~300Lux		MI
Small bright dot 细碎亮点	Use ND5% filter masking, visual invisibility is OK 使用ND5%遮盖，目视不可见即为OK		MI
Light leakage 漏光	1. Use ND5% filter masking, visual invisibility is OK 使用ND5%遮盖，目视不可见即为OK 2. If necessary, sign off on the sample 必要时，签限定样		MI
Backlight black/white dots 背光黑点/白点	1. D≤0.15mm，Ignore（忽略） 2. 0.15mm＜D≤0.30mm；N≤3；DS≥10mm 3. 0.30mm＜D，Not allowable（不允许）		MI
Linear foreign bodies 线状异物（异物毛丝等）	1. W≤0.05mm；L≤5mm，Ignore（忽略） 2. 0.05mm＜W≤0.10mm ; L≤5mm ; N≤3 ; DS≥10mm 3. 0.10mm＜W；5mm＜ L， Not allowable（不允许）		MI
Black/White Print 黑印/白印	Use ND5% filter masking, visual invisibility is OK 使用ND5%遮盖，目视不可见即为OK		MI
The display is uneven 显示不均匀	Use ND5% filter masking, visual invisibility is OK 使用ND5%遮盖，目视不可见即为OK		MI
The brightness is uneven 亮度不均匀	Brightness uniformity＜85.0%，Not allowable 亮度均匀性＜85.0%，不允许		MI
Displacement of the membrane 膜材移位	Not allowable 不允许		MI
Interference pattern/Newtonian pattern 干涉纹/牛顿纹	Not allowable 不允许		MI
Display abnormal 显示异常	Not allowable 不允许	MA	
No display 无显示	Not allowable 不允许	MA	
Line/Missing Drawing 线条/缺画	Not allowable 不允许	MA	
Splash screen 闪屏	Not allowable 不允许	MA	
LCD grid LCD网格	Not allowable 不允许	MA	
Afterimage 残影	Not allowable 不允许	MA	
Wrong viewing angle 视角错误	Not allowable 不允许	MA	
No touch 无触摸	Not allowable 不允许	MA	
Touch the jump point 触摸跳点	Not allowable 不允许	MA	
Not sensitive 触摸不灵敏	Not allowable 不允许	MA	