Request information

PRODUCT SPECIFICATION

TFT-LCD MODULE

Module No: 100281-01

☑ Preliminary Specification

☐ Approval Specification

Designed by	Checked by	Approved by

Final Approval by Customer

Approved by	Comment

For more information, contact us:

WWW.DCLTEK.COM | 1-800-407-8917 | SALES@DCLTEK.COM

※The specification of "TBD" should refer to the measured value of sample . If there is difference between the design specification and measured value, we naturally shall negotiate and agree to solution with customer.

This document contains confidential and proprietary information of DCL Technologies, Inc. It is provided solely for the recipient's evaluation and may not be reproduced, disclosed, or distributed, in whole or in part, without the prior written consent of DCL Technologies, Inc.

1.Document Revision History

Version	Contents	Date	Note
V0	Initial version	2024.01.20	

2. GENERAL INFORMATION

Item	Specification	Unit
Panel size	TFT"2.4	inch
Display Mode	Normally black	--
Display Resolution	240(RGB)x320	Pixel
Pixel Pitch	0.153(H) × 0.153(V)	-
Viewing direction	ALL	-
Module outline dimension	40.92(H)×57.45(V)×2.16(T)	mm^3
LCD Panel Active Area	36.72 (H)* 48.96(V)	mm^2
Colors	262K	-
Driver IC	ST7789T3i	-
Interface	4线SPI	--
Backlight Type	White LED	--

3. EXTE RNAL DIMENSIONS

This document contains confidential and proprietary information of DCL Technologies, Inc. It is provided solely for the recipient's evaluation and may not be reproduced, disclosed, or distributed, in whole or in part, without the prior written consent of DCL Technologies, Inc.

Front View

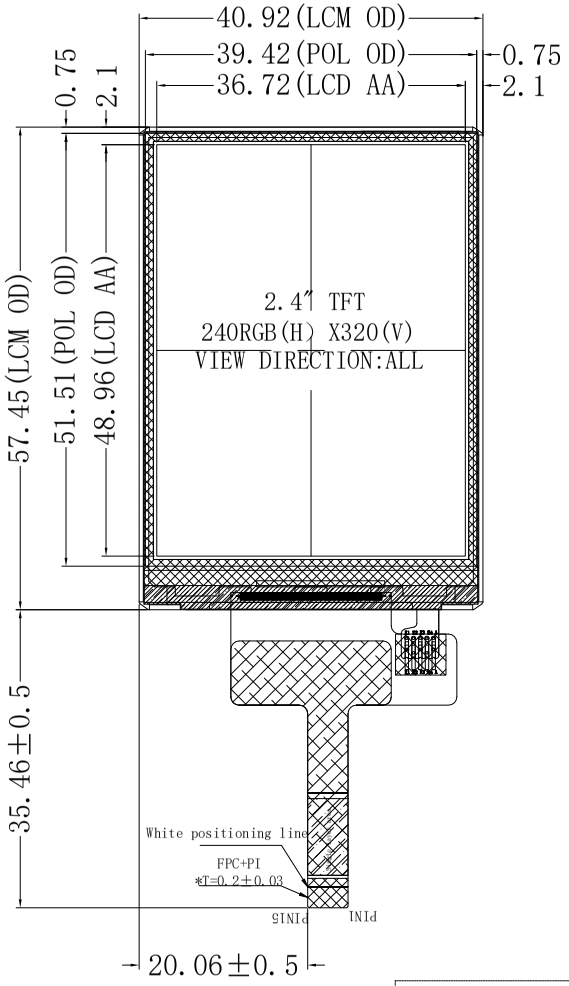

Side View

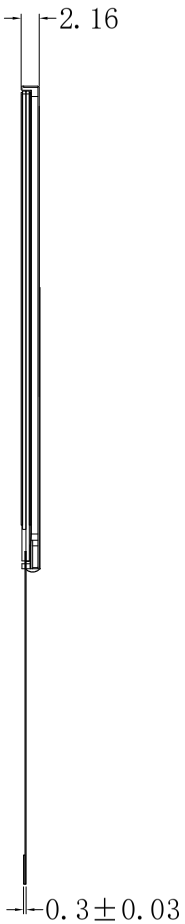

Back View

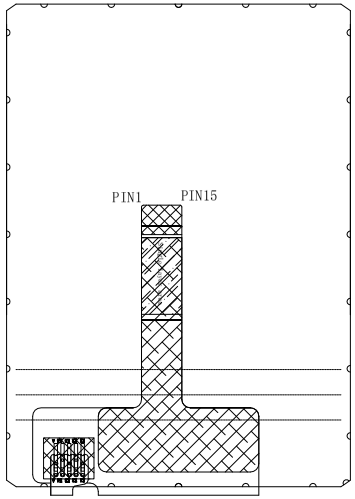

LCD PIN

PIN	SINGAL
1	GND
2	GND
3	TE (1.8V level)
4	SDI (1.8V level)
5	SCL (1.8V level)
6	RS (1.8V level)
7	CS (1.8V level)
8	Reset (1.8V level)
9	IOVCC(1.8V)
10	VCC(2.8V)
11	VCC(2.8V)
12	GND
13	LEDK
14	LEDA
15	LEDA

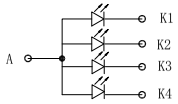

If=80MA ,Vf=3.2V(TYP)
BACKLIGHT CIRCUIT

Notes:

1. Display : 2.4″, QVGA TFT
2. Resolution: 240xRGBx320
3. View Direction: ALL
4. PolarizerMode: Transmissive/Positive
5. LCD Driver: ST7789T3i
6. LCM Bringhtness: Brightness:300cd/m²(TYP),uniformity≥80%
7. *:Critical dimension ( ): Reference dimension;
8. OPERATING TEMP: -20° C~ +70° C
9. STORAGE TEMP: -30° C~ +80° C
10. Requirements on Environmental Protection: ROHS

REV	DESCRIPTION	DATE	NAME
3			
2			
1			
0	New	2023.12.23	

DCLTEK

SCALE:1/1	UNIT:mm	PAGE:1/1	Approve	Check	Drawn
Part No:	100281-01	VER:V0			
Customer No:					

4. Interface Signal

Pin No.	Symbol	Description
1	GND	Ground
2	GND	Ground
3	TE (1.8V level)	Data enable signa
4	SDI (1.8V level)	Serial input/output signal
5	SCL (1.8V level)	Serial clock
6	RS (1.8V level)	Data or command select pin
7	CS (1.8V level)	Serial chip select. Normally pull Low
8	Reset (1.8V level)	Reset signal(Low: Active)
9	IOVCC(1.8V)	I/O circuit supply voltage
10	VCC(2.8V)	Analog supply voltage
11	VCC(2.8V)	Analog supply voltage
12	GND	Ground
13	LEDK	LED cathode
14	LEDA	LED anode
15	LEDA	LED anode

5. ABSOLUTE MAXIMUM RATINGS

Parameter	Symbol	Min	Max	Unit	Note
Power Supply voltage 1	VCC~GND	-0.3	+3.3	V	Note1
Power Supply voltage 2	IOVCC~GND	-0.3	+3.3	V	Note1
Operating temperature	Topr	-20	+70	℃	-
Storage temperature	Tstg	-30	+80	℃	Note2

6. 0 ELECTRICAL CHARACTERISTICS

DC CHARACTERISTICS

Parameter	Symbol	Min	Typ	Max	Unit
Supply voltage for analog	VDD	2.5	3.0	3.3	V
Supply voltage for I/O interface	IOVCC	1.65	1.8	1.8	V
Input voltage 'H'level	V_{IH}	0.7*IOVCC	—	IOVCC	V
Input voltage 'L'level	V_{IL}	0	—	0.3*IOVCC	V
Output voltage 'H'level	V_{OH}	0.8*IOVCC	—	IOVCC	V
Output voltage 'L'level	V_{OL}	0	—	0.2*IOVCC	V

AC CHARACTERISTICS

Please refer to the LCM driver IC datasheet..

6.1 Back-light Unit:

PARAMETER	Sym.	Min.	Typ.	Max.	Unit	Test Condition	Note
LED Current	IF	–	80	–	mA	–	–
LED Voltage	VF	–	3.2	3.3	V	–	–
LCM Brightness	Lv	–	300	–	Nits	@CA310	
Life Time		–	30000	–	Hr.	I≦80mA	–
Color	White						

7. ELECTRO-OPTICAL CHARACTERISTICS

Item		Symbol		Condition	Min	Typ	Max	Unit	Note
Transmittance (w/o DBEF)		T%		θ=0° Ta=25℃		4.65	-	%	
Contrast ratio		Cr			1000	1500	-	-	
Response time		Ton+Toff			-	30	35	ms	
LCM Surface Luminance		LV			-	300	-	cd/㎡	
Viewing angle range		H or V er	Θ_{x+}	Center CR>10		80	-	deg	
			Θ_{x-}			80	-	deg	
			Θ_{Y+}			80	-	deg	
			Θ_{Y-}			80	-	deg	
CIE(x,y) chromaticity	Red	x		Viewing normal angle Θx=θy=0° Ta=25℃	0.591	0.621	0.651	-	
		y			0.302	0.332	0.362	-	
	Green	x			0.264	0.294	0.324	-	
		y			0.547	0.577	0.607	-	
	Blue	x			0.111	0.141	0.171	-	
		y			0.127	0.157	0.187	-	
	White	x			0.28	0.31	0.34	-	
		y			0.32	0.35	0.38	-	

Note 1.Ambient condition：25℃±2℃，60±10%RH，under 10 Lunx in the darkroom。
Note 2.Measure device：BM-7A (TOPCON)，viewing cone=2°
Lv = Average Surface Luminance with all white pixels (P1,P2,P3,P4,P5)

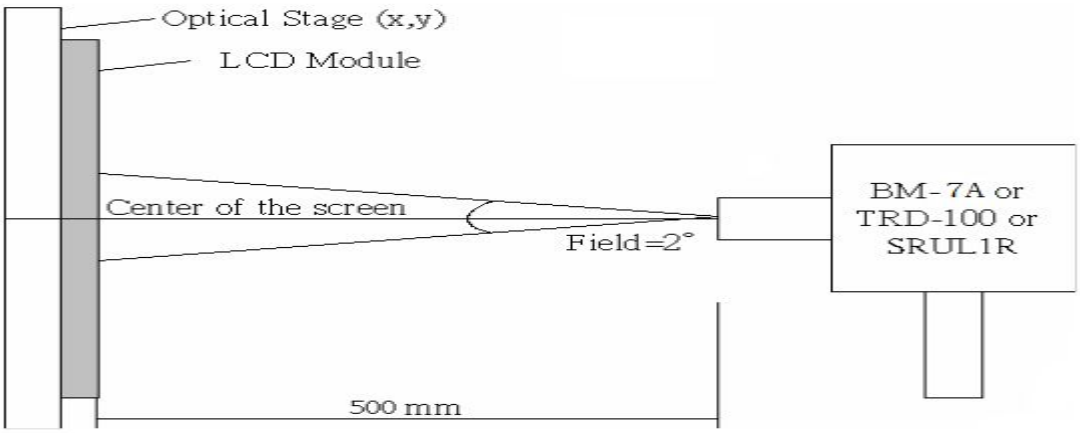

Note 3. Definition of Contrast Ratio：

$$CR = \frac{\text{Average Surface Luminance with all black pixels (P1,P2,P3,P4,P5)}}{\text{Average Surface Luminance with all white pixels (P1,P2,P3,P4,P5)}}$$

Note 4. Definition of Response Time (Ton, Toff), The response time is defined as the time interval between the 10% and 90% amplitudes.

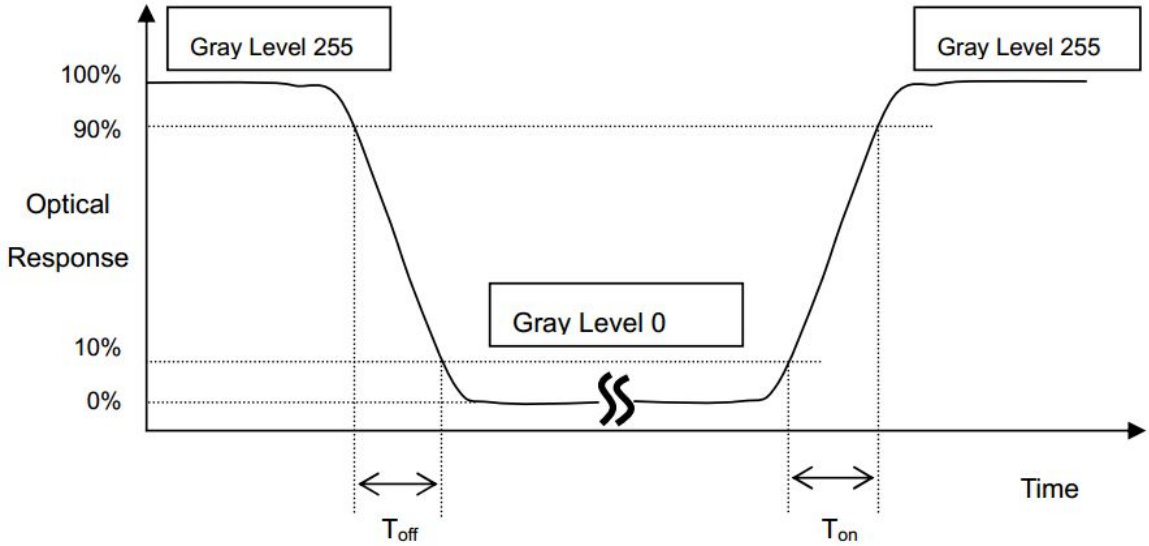

Note 5. Definition of view angle(θ，ψ)：

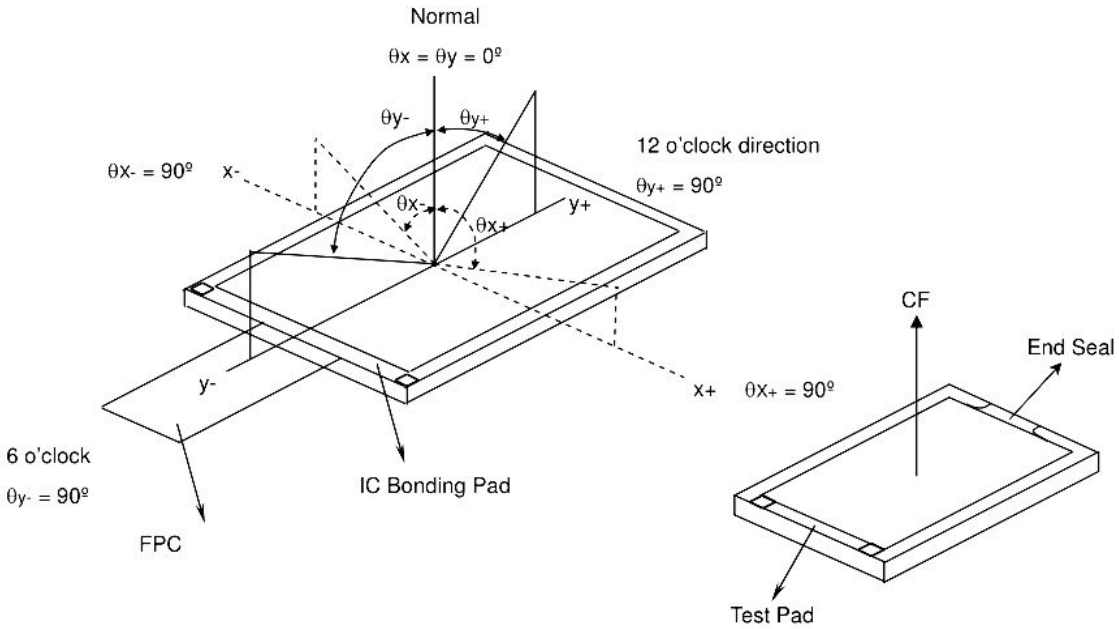

Note 6. The LCD module should be stabilized at a given temperature for 20 minutes to avoid abrupt temperature change during measuring. In order to stabilize the luminance, the measurement should be executed after lighting Backlight for 20 minutes in a windless room. Measouring method for Contrast ratio, surface luminance, Luminance uniformity,CIE(x,y) chromaticity.

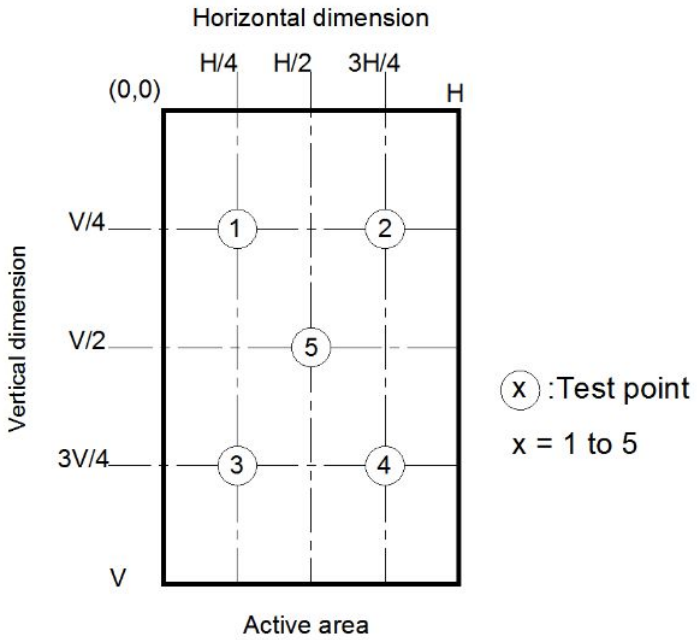

Light spot size ∅ =7mm, 500mm distance from the LCD surface to detector lens measurement instrument is TOPCON's luminance meter BM-7

8. Reliability test items

No.	Test Item	Test Condition	Notes
1	High Temp. Storage	+80°C / 48H	1. Functional test isOK. Missing Segment,short, unclear segment non-display,display abnormally and liquid crystal leakare un-allowed. 2. No low temperature bubbles,end seal loose andfall, frame rainbow.
2	Low Temp. Storage	-30°C / 48H	
3	High Tempe. Operating	+70°C / 48H	
4	Low Tempe. Operating	-20°C / 48H	
5	High Temperature /Humidity storage	50°C x 90%RH /48H	
6	Thermal and cold shock	Static state， -20℃（30min） ~60℃（30min），50 cycles	
7	ESD test	± 2KV,Human Body Mode, 150pF/330Ω; ±4KV, Air Mode, 150pF/330Ω;	

Note: All tests above are practiced at module type.

There is no display function NG issue occurred, All the cosmetic specification is judged before the reliability stress.

9.0 General Precaution

9.1 Use Restriction

This product is not authorized for use in life supporting systems, aircraft navigation control systems, military systems and any other application where performance failure could be life-threatening or otherwise catastrophic.

9.2 Asembly Precaytton

1、Please use the mounting hole on the module side in installing and do not bending or wrenching LCD in assembling. And please do not drop, bend or twist LCD module in handling.

2、Please design display housing in accordance with the following guide lines.

3、Housing case must be destined carefully so as not to put stresses on LCD all sides and not to wrench module. The stresses may cause non-uniformity even if there is no non-uniformity statically.

4、Keep sufficient clearance between LCD module back surface and housing when the LCD module is mounted. The clearance in the design is recommended taking into account the tolerance of LCD module thickness and mounting structure height on the housing.

5、 Please do not push or scratch LCD panel surface with any-thing hard. And do not soil LCD panel surface by touching with bare hands. (Polarizer film, surface of LCD panel is easy to be flawed.)

6、Please do not press any parts on the rear side such as source IC, gate IC, and FPC during handling LCD module. If pressing rear part is unavoidable, handle the LCD module with care not to damage them.

7、Please wipe out LCD panel surface with absorbent cotton or soft cloth in case of it being soiled.

8、 Please wipe out drops of adhesives like saliva and water on LCD panel surface immediately. They might damage to cause panel surface variation and color change. 11.2.7 Please do not take a LCD module to pieces and reconstruct it. Resolving and reconstructing modules may cause them not to work well.

9.3 Disassembling or Modification

Do not disassemble or modify the module. It may damage sensitive parts inside LCD module, and may cause scratches or dust on the display. does not warrant the module, if customers disassemble or modify the module.

9.4 Breakage of LCD Panel

1 、If LCD panel is broken and liquid crystal spills out, do not ingest or inhale liquid crystal, and do not contact liquid crystal with skin.

2、 If liquid crystal contacts mouth or eyes, rinse out with water immediately.

3、 If liquid crystal contacts skin or cloths, wash it off immediately with alcohol and rinse thoroughly with water.

4、 Handle carefully with chips of glass that may cause injury, when the glass is broken.

9.5 Absolute Maximum Ratings and Power Protection Circuit

1、Do not exceed the absolute maximum rating values, such as the supply voltage variation, input voltage variation, variation in parts' parameters, environmental temperature, etc., otherwise LCD module may be damaged.

2、 Please do not leave LCD module in the environment of high humidity and high temperature for a long time.

3、 It's recommended employing protection circuit for power supply.

11.6 Operation

1 、Do not touch, push or rub the polarizer with anything harder than HB pencil lead.Use fingerstalls of soft gloves in order to keep clean display quality, when persons handle the LCD module for incoming inspection or assembly.

2、 When the surface is dusty, please wipe gently with absorbent cotton or other soft material.

3 、Wipe off saliva or water drops as soon as possible. If saliva or water drops contact with polarizer for a long time, they may causes deformation or color fading.

4 、When cleaning the adhesives, please use absorbent cotton wetted with a little petroleum benzine or other adequate solvent.

9.6 Static Electricity

1 、Protection film must remove very slowly from the surface of LCD module to prevent from electrostatic occurrence.

2、 Because LCD module uses CMOS-IC on TFT-LCD panel, it is very weak to electrostatic discharge. Please be careful with electrostatic discharge.

3 、Persons who handle the module should be grounded through adequate methods.

9.7 Disposal

When disposing LCD module, obey the local environmental regulations.

9.8 OTHERS

1 、A strong incident light into LCD panel might cause display characteristics' changing inferior because of polarizer film, color filter, and other materials becoming inferior. Please do not expose LCD module direct sunlight land strong UV rays.

2、 Please pay attention to a panel side of LCD module not to contact with other materials in preserving it alone.

3、 For the packaging box, please pay attention to the followings:

4、Packaging box and inner case for LCD are designed to protect the LCDs from the damage or scratching during transportation. Please do not open except
picking LCDs up from the box.

5、 Please do not pile them up more than 6 boxes. (They are not designed so.) And please do not turn over.

6、 Please handle packaging box with care not to give them sudden shock and vibrations. And also please do not throw them up.

7、Packing box and inner case for LCDs are made of cardboard. So please pay attention not to get them wet. (Such like keeping them in high humidity or wet place can occur getting them wet.) place can occur getting them wet.)

10. Packing form-TBD

DCLTEK

Incoming Inspection Standard

品质允收标准

Model N0. /产品型号: Applicable to Touch Screen

Updated Date /生效日期: 2025.04.01

Version / 版 本 号: V0

Record of Revision /修订履历.

Version /版本号	Revision Record /修订内容	Reviser /修订人	Revision Date /修订日期
V0	首发 / Initial release		2025.04.01

1、Scope of application /适用范围.

Applicable to Touch Screen.

2、Inspection conditions and environment / 检验条件与环境.

2.1、Inspection Conditions / 检验条件:

2.1.1、Inspection Distance / 检测距离: 35cm ±5cm.

2.1.2、Inspection time /检验时间：Displays performance test /功能测试：2~3S /Image，

Appearance Inspection / 外观检验：8~10S.

2.1.3、Inspection the viewing angle /检验视角:

Display Inspection Angle /显示检验角度： ±45°.

Appearance Inspection Angle /外观检验角度：±45°.

Eye position /眼睛位置：

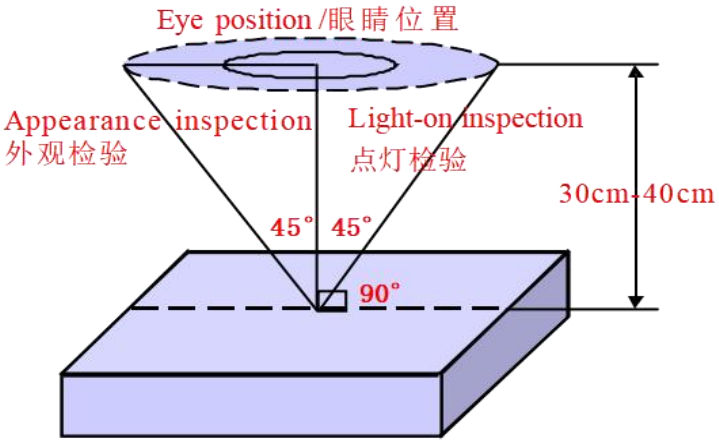

(Perpendicular to LCD panel surface /垂直于LCD表面)

2.2、 Inspection environment /检验环境：

Temperature / 温度		25±5℃
Humidity / 湿度		55±5%RH
Brightness 亮度	Appearance Inspection / 外观检验	800~1000 Lux
	Display Inspection / 功能检验	200~300 Lux

2.3、Sampling conditions / 抽样方式.

Sampling Plan /抽样计划		GB/T 2828.1- 2003
		Batch single sampling/批量单次抽样
		General inspection level：Ⅱ/一般检验水平：二级
AQL	Major Defect /主要缺陷	0.25
	Minor Defect /次要缺陷	0.65

3、Terms and definitions /术语和定义.

3.1、Defect classification / 缺陷分类：

3.1.1、Major defects /主要缺陷: Defects that cause the product to fail or reduce the usability of the product / 引起产品功能失效和减少产品的有效使用与操作的缺陷.

3.1.2、Minor defects / 次要缺陷: Defects that do not affect the functionality and effective use and operation of the product / 不影响产品功能和有效使用与操作的缺陷.

3.2、Point defects / 点状缺陷：

The size of a punctate defect is defined by the diameter D, and the average diameter of the defect is D=1/2(W+L) / 点状缺陷由直径 D 定义大小，缺陷的平均直径 D=1/2(W+L).

3.3、line defects / 线状缺陷：

When defect size L ≥ 2W,the defect count as liner type defect.Size of linear defect is defined by length (L) and the maximum width (W)

当缺陷尺寸 L≥2W 时，被视为线状缺陷，线状缺陷是由长度（L）和最大宽度（W）定义的.

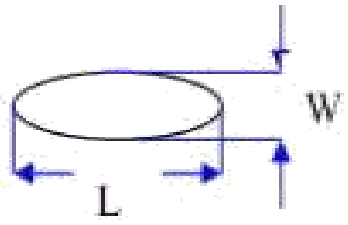

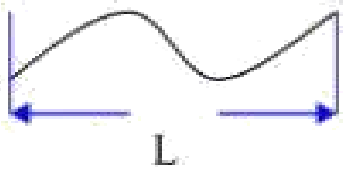

3.4、LCD sub-pixels / LCD 子像素点:

The sub-pixel defect area is greater than 50% of the LCD sub-pixel area, and is visible through ND5% masking

子像素点缺陷面积大于 50% LCD 子像素面积, 且透过 ND5%遮盖是可见的.

3.5、ND card test method / ND 卡检验方法:

Hold the ND card about 5cm above the display area, with your eyes 30-40cm away from the panel, and observe for 2~3 seconds

在显示区域上方大约 5cm 处握住 ND 卡，眼睛距离面板 30-40cm，观察 2~3 秒.

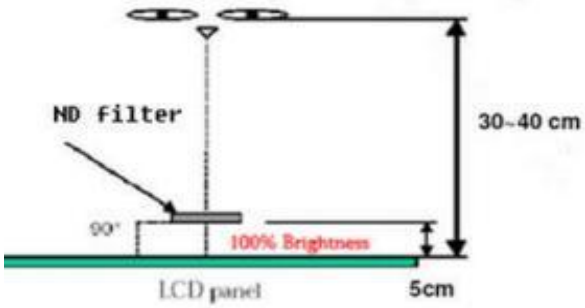

3.6、Surface substances that can be cleaned are not considered defects (e.g. finger prints on the protective film, dust particles)

可以被清洁干净的表面物质不视为缺陷 (如保护膜上的手指印，尘粒) .

3.7、Defects that can be covered by the material and are not visible to the eye, and do not affect the function and use are not considered defects

能被物料覆盖目视不可见，且不影响功能与使用的缺陷不视为缺陷.

3.8、AA shows that damage to the glass outside the area does not affect the effective line and does not expand the loss is acceptable

AA 显示区域以外的玻璃损伤，不影响有效线路和不会在扩大损失的是可以接受的.

3.9、Issues not specified or defined in this document shall be dealt with through friendly negotiation between the parties / 本文件中未规定或定义的问题，双方友好协商处理.

4.0、Inspection standards /检验标准:

4.1、Structural size standards / 结构尺寸标准:

Measurement items /测量项目		Specification /规格	Remark /备注
Name/名称	Unit /单位	Tolerance /公差	
Outside dimension：Length 尺寸：长	mm /毫米	0.10mm~0.3mm	Please refer to the product specification for detailed dimensions and tolerances 详细的尺寸规格和公差请参考产品规格书
Outside dimension：Width 尺寸：宽	mm /毫米	0.10mm~0.3mm	
Outside dimension：Thickness 尺寸：厚	mm /毫米	0.20mm~0.50mm	

4.2、Appearance Inspection standards:

(D ： diameter, W ： width, L ： length, N ： quantity, DS ： spacing)

Material 检验区域	Inspection items 检验项目	Product size 适用尺寸	Inspection standards 检验规格	Category 缺陷类别	
LCD	ITO	Full size 全尺寸	ITO can't open circuit, short circuit, ITO notch cannot exceed 70% of width. ITO 不能有开路和短路，ITO 缺口不能超过宽度的 70%.	MA	
	Corners broken 崩边/崩角	Full size 全尺寸	1、It cannot affect the appearance of valid routes and functions; 不能影响有效线路和功能外观.	MA	
			2、There must be no extensible rips 不能有可延伸性裂纹.	MA	
Silicone 硅胶	Silicone coating 硅胶涂布	Full size 全尺寸	1、The height cannot exceed the LCD CF surface / 高度不能超过 LCD CF 面.		MI
			2、No overflow and lack of glue / 不能溢胶和缺胶.		MI
			3、Silicone cannot cover POL and FPC/ 硅胶不能覆盖到 POL 和 FPC.		MI

Material 检验区域	Inspection items 检验项目	Product size 适用尺寸	Inspection standards 检验规格	Category 缺陷类别	
PCBA FPC Connector 连接器	Appearance 表面外观	Full size 全尺寸	1.FPC is not allowed to have drape/bubble/fold / 不允许有披锋/气泡/褶皱.		MI
			2.Surface scratches do not allow copper leakage / 表面划伤不允许出现漏铜.	MA	
			3.Cracking is not allowed / 不允许破裂.	MA	
			4.Gold finger oxidation is not allowed 不允许金手指氧化.	MA	
			5.Chromatic aberration is not allowed 不允许出现色差.	MA	
	Components 元器件	Full size 全尺寸	1. Damage, missing parts, and incorrect models are not allowed 不允许损伤、缺件、型号错误.	MA	
			2.Components need to be insulated with high temperature adhesive (unless not required by the drawings) / 元器件需要有高温胶绝缘保护（除非图纸无要求）.		MI
	Weld 焊接	Full size 全尺寸	1. False soldering, virtual soldering, and tinning are not allowed 不允许假焊、虚焊、连锡.	MA	
			2. No solder bead residue is allowed 不允许有锡珠残留.		MI
			3.The pads need to be glued with high temperature (unless not required by the drawings) / 焊盘需贴高温胶（除非图纸无要求）.		MI
POL 偏光片	Scratches 划伤	Under 6 inches 6 寸以下	1.W≤0.05mm；L≤5mm，Ignore（忽略）. 2.0.05mm＜W≤0.10mm ; L≤5mm ; N≤2; DS≥10mm. 3.0.10mm＜W；5mm＜L，Not allowable（不允许）.		MI
		6~10.0 inches 6 寸~10.0 寸	1.W≤0.07mm；L≤5mm，Ignore（忽略）. 2.0.07mm＜W≤0.12mm ; L≤10mm ; N≤3 ; DS≥10mm. 3.0.12mm＜W；10mm＜L，Not allowable（不允许）.		MI
		More than 10 inches 10 寸以上	1.W≤0.10mm；L≤5mm，Ignore（忽略）. 2.0.10mm＜W≤0.15mm ; L≤10mm ; N≤4 ; DS≥10mm. 3.0.15mm＜W；10mm＜L，Not allowable（不允许）.		MI

Material 检验区域	Inspection items 检验项目	Product size 适用尺寸	Inspection standards 检验规格	Category 缺陷类别	
POL 偏光片	Bubbles	Under 6 inches 6 寸以下	1.D≤0.15mm，Ignore（忽略）. 2.0.15mm＜D≤0.30mm；N≤2；DS≥10mm. 3.D＞0.30mm，Not allowable（不允许）.		MI
		More than 6 inches 6 寸以上	1.D≤0.20mm，Ignore（忽略）. 2.0.20mm＜D≤0.40mm；N≤3；DS≥10mm. 3.D＞0.40mm，Not allowable（不允许）.		MI
	Bubbles around the edges 边缘气泡	Full size 全尺寸	1.Within 1/2BM of the display area, it is not allowed 显示区往外 1/2BM 区域内，不允许. 2.The display area is 1/2 outside the BM area, and it is not controlled 显示区往外 1/2BM 区域以外，不管控.		MI
	Point defects Embossing	Under 6 inches 6 寸以下	1.D≤0.15mm，Ignore（忽略）. 2.0.15mm＜D≤0.30mm；N≤2；DS≥10mm. 3.D＞0.30mm，Not allowable（不允许）.		MI
		6~10.0 inches 6 寸~10.0 寸	1.D≤0.20mm，Ignore（忽略）. 2.0.20mm＜D≤0.40mm；N≤3；DS≥10mm. 3.D＞0.40mm，Not allowable（不允许）.		MI
		More than 10 inches 10 寸以上	1.D≤0.25mm，Ignore（忽略）. 2.0.25mm＜D≤0.50mm；N≤4；DS≥10mm. 3.D＞0.50mm，Not allowable（不允许）.		MI
	Dirty 脏污	Full size 全尺寸	Dirt, finger prints, etc. are not allowed 不允许有脏污、手指印等.		MI
	Warping 起翘	Full size 全尺寸	Not allowed 不允许.		MI
	Paste offset 贴附偏位	Full size 全尺寸	It is not allowed to exceed the patch tolerance required by the drawing; After TP lamination, it is not allowed to leak the edges of the polarizer 不允许超出图纸要求的贴片公差；在 TP 贴合后不允许漏偏光片边缘.		MI
	Angle mistake 角度错误	Full size 全尺寸	Not allowed 不允许.	MA	
	Mixture 混料	Full size 全尺寸	Not allowed 不允许.	MA	

Material 检验区域	Inspection items 检验项目	Product size 适用尺寸	Inspection standards 检验规格	Category 缺陷类别	
TP	Scratches 划伤	Under 6 inches 6 寸以下	1.W≤0.05mm；L≤5mm，Ignore（忽略）. 2.0.05mm＜W≤0.10mm；L≤5mm；N≤2；DS≥10mm. 3.0.10mm＜W；5mm＜L，Not allowable（不允许）. 4.There is a feeling scratch，Not allowable 有感划伤，不允许.		MI
		6~10.0 inches 6 寸~10.0 寸	1.W≤0.07mm；L≤5mm，Ignore（忽略）. 2.0.07mm＜W≤0.12mm；L≤10mm；N≤3；DS≥10mm. 3.0.12mm＜W；10mm＜L，Not allowable（不允许）. 4.There is a feeling scratch，Not allowable 有感划伤，不允许.		MI
		More than 10 inches 10 寸以上	1.W≤0.10mm；L≤5mm，Ignore（忽略）. 2.0.10mm＜W≤0.15mm；L≤10mm；N≤4；DS≥10mm. 3.0.15mm＜W；10mm＜L，Not allowable（不允许）. 4.There is a feeling scratch，Not allowable 有感划伤，不允许.		MI
	Black dots white dots 黑点/白点	Under 6 inches 6 寸以下	1.D≤0.15mm，Ignore（忽略）. 2.0.15mm＜D≤0.30mm；N≤2；DS≥10mm. 3.D＞0.30mm，Not allowable（不允许）.		MI
		6~10.0 inches 6 寸~10.0 寸	1.D≤0.20mm，Ignore（忽略）. 2.0.20mm＜D≤0.40mm；N≤3；DS≥10mm. 3.D＞0.40mm，Not allowable（不允许）.		MI
		More than 10 inches 10 寸以上	1.D≤0.25mm，Ignore（忽略）. 2.0.25mm＜D≤0.50mm；N≤4；DS≥10mm. 3.D＞0.50mm，Not allowable（不允许）.		MI
	OCA Bubbles 气泡	Full size 全尺寸	Not allowed 不允许.		MI
	Corners broken 崩边/崩角	Full size 全尺寸	1.Product front /产品正面：Edge and corner chipping is not allowed / 崩角、崩边不允许 2.Product back /产品背面: X≤ 0.5 , Y≤0.5，Z≤1/2T；N≤4；DS≥10mm.	MA	
	Silk screen 丝印	Full size 全尺寸	The silk screen is clear, complete and correct 丝印清晰、完整、内容正确.		MI

Material 检验区域	Inspection items 检验项目	Product size 适用尺寸	Inspection standards 检验规格	Category 缺陷类别	
TP	Dirty 脏污	Full size 全尺寸	Uncleanable dirt，Not allowable. 不可擦拭的脏污，不允许.		MI
	Broken 破损	Full size 全尺寸	Not allowable. 不允许.		MI
	Ink color aberration 油墨色差	Full size 全尺寸	ΔE>1，Not allowable（不允许）.		MI
	Cover pinholes 针孔	Full size 全尺寸	1.D≤0.20mm , N≤2 , DS≥10mm，allowable 2.D > 0.20mm，intensive pinholes（密集型针孔），Not allowable（不允许）.		MI
	Paint off 掉漆	Full size 全尺寸	Touch-up on the back of the cover is allowed, and the touch-up area cannot exceed 2.0mm in diameter / 允许在盖板背面补漆，补漆面积不能超过直径 2.0mm.		MI
BL 背光	Backlight separation 背光分离	Full size 全尺寸	Not allowable 不允许.		MI
	Deformed 变形	Full size 全尺寸	Measured using a plug gauge，If the deformation exceeds 0.3mm, NG is judged 使用塞规测量，形变超过 0.3mm，判定 NG.		MI
	Iron frame Oxidation /abscission 铁框氧化/脱落	Full size 全尺寸	Not allowable 不允许.		MI
	Dirt/adhesive residue/solder beads 脏污/残胶/锡珠	Full size 全尺寸	Not allowable 不允许.		MI
	Inkjet/barcode/ QR code 喷码/条码/二维码	Full size 全尺寸	The inkjet code is clear and complete, the barcode and QR code can be scanned normally, and the content and format meet the requirement / 喷码清晰完整、条码和二维码可正常扫描，内容和格式与要求相符.		MI
	Auxiliary materials 辅料	Full size 全尺寸	Accessories (vinyl, double-sided tape, insulating glue, etc.) are not allowed to be missed, misguided, defective, etc 辅料（黑胶、双面胶、绝缘胶等）不允许有漏贴、贴偏、残缺等.		MI

4.3、Functional inspection standards:

(D : diameter, W : width, L : length, N : quantity, DS : spacing)

Material 检验区域	Inspection items 检验项目	Product size 适用尺寸	Inspection standards 检验规格	Category 缺陷类别	
Display Screen 模组	Light leakage / Mura 漏光/ Mura	Full size 全尺寸	1.Use ND5% filter masking, visual invisibility is OK 使用 ND5%遮盖，目视不可见即为 OK. 2.If necessary, sign off on the sample 必要时，签限定样.		MI
	Brightness uniformity 亮度均匀性	Full size 全尺寸	Brightness uniformity < 85.0%，Not allowable 亮度均匀性 < 85.0%，不允许.	MA	
	LCD bright spots/dark spots 玻璃亮点/暗点	Under 6 inches 6 寸以下	1.D≤0.10mm，Ignore（忽略）. 2.0.10mm < D≤0.20mm；N≤2；DS≥10mm. 3.D > 0.20mm，Not allowable（不允许）.		MI
		6~10.0 inches 6 寸~10.0 寸	1.D≤0.15mm，Ignore（忽略）. 2.0.15mm < D≤0.30mm；N≤3；DS≥10mm. 3.D > 0.30mm，Not allowable（不允许）.		MI
		More than 10 inches 10 寸以上	1.D≤0.20mm，Ignore（忽略）. 2.0.20mm < D≤0.40mm；N≤4；DS≥10mm. 3.D > 0.40mm，Not allowable（不允许）.		MI
	Backlight black dots/white dots 背光黑点/白点	Under 6 inches 6 寸以下	1.D≤0.15mm，Ignore（忽略）. 2.0.15mm < D≤0.30mm；N≤2；DS≥10mm. 3.D > 0.30mm，Not allowable（不允许）.		MI
		6~10.0 inches 6 寸~10.0 寸	1.D≤0.20mm，Ignore（忽略）. 2.0.20mm < D≤0.40mm；N≤3；DS≥10mm. 3.D > 0.40mm，Not allowable（不允许）.		MI
		More than 10 inches 10 寸以上	1.D≤0.25mm，Ignore（忽略）. 2.0.25mm < D≤0.50mm；N≤4；DS≥10mm. 3.D > 0.50mm，Not allowable（不允许）.		MI
	Linear foreign bodies 线状异物	Under 6 inches 6 寸以下	1.W≤0.05mm；L≤5mm，Ignore（忽略）. 2.0.05mm < W≤0.10mm ; L≤5mm ; N≤2; DS≥10mm. 3.0.10mm < W；5mm < L，Not allowable（不允许）.		MI
		6~10.0 inches 6 寸~10.0 寸	1.W≤0.07mm；L≤5mm，Ignore（忽略）. 2.0.07mm < W≤0.12mm ; L≤10mm ; N≤3 ; DS ≥10mm. 3.0.12mm < W；10mm < L，Not allowable（不允许）.		MI
		More than 10 inches 10 寸以上	1.W≤0.10mm；L≤5mm，Ignore（忽略）. 2.0.10mm<W≤0.15mm ; L≤10mm ; N≤4 ; DS ≥10mm. 3.0.15mm < W；10mm < L, Not allowable（不允许）.		MI

Material 检验区域	Inspection items 检验项目	Product size 适用尺寸	Inspection standards 检验规格	Category 缺陷类别	
Display Screen 模组	White/Black print 白印/黑印	Full size 全尺寸	Use ND5% filter masking, visual invisibility is OK 使用 ND5%遮盖，目视不可见即为 OK.		MI
	Interference pattern/Newton pattern 干涉纹/牛顿纹	Full size 全尺寸	Not allowable 不允许.		MI
	Membranes displacement 膜材移位	Full size 全尺寸	Not allowable 不允许.		MI
	Color blocks 色斑	Full size 全尺寸	Use ND5% filter masking, visual invisibility is OK /使用 ND5%遮盖，目视不可见即为 OK.		MI
	Display abnormal 画异	Full size 全尺寸	Not allowable 不允许.	MA	
	No display 无显示	Full size 全尺寸	Not allowable 不允许.	MA	
	Line/Missing Drawing 线条/缺画	Full size 全尺寸	Not allowable 不允许.	MA	
	Splash screen 闪屏	Full size 全尺寸	Not allowable 不允许.	MA	
	LCD grid LCD 网格	Full size 全尺寸	Not allowable 不允许.	MA	
	Afterimage 残影	Full size 全尺寸	Not allowable 不允许.	MA	
	Wrong viewing angle 可视角错误	Full size 全尺寸	Not allowable 不允许.	MA	
TP	No touch 无触摸	Full size 全尺寸	Not allowable 不允许.	MA	
	Touch the jump point 触摸跳点	Full size 全尺寸	Not allowable 不允许.	MA	
	Touch not sensitive 触摸不灵敏	Full size 全尺寸	Not allowable 不允许.	MA	